East Engin
Library
SEP 1 1924

Volume 31 SEPTEMBER, 1924 Number 1

MACHINERY

THE INDUSTRIAL PRESS Publishers, 140-148 LAFAYETTE ST., NEW YORK

B·S
TRADE MARK

MILL IT AUTOMATICALLY
THE BROWN & SHARPE WAY

SIMPLE FIXTURES—SHORT TABLE TRAVEL—HIGH PRODUCTION

On Brown & Sharpe Automatic Milling Machines all the operator does is load the work holding fixtures — the machine does the rest.

No. 21 for the lighter jobs and No. 33 for the heavy work. See pages 85-A and 85-B of this issue.

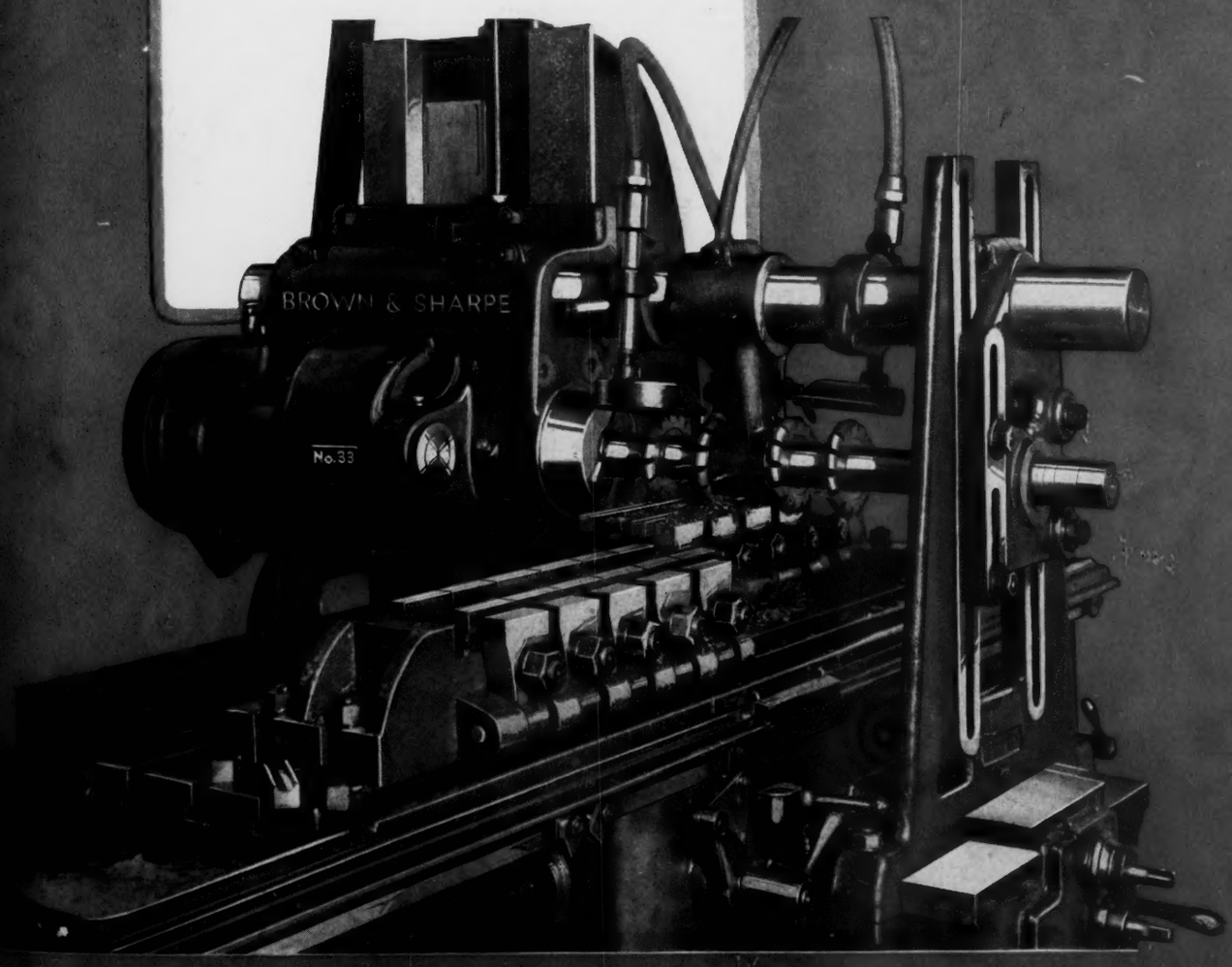

A Set Screw Thinner than your Pencil—

With a guaranteed strength for every service

Why stick to solid set screws for the smaller sizes? You can get Bristo Safety Set Screws in 1/8" and 3/16" sizes, guaranteed to be as sturdy as any solid set screw, either while being tightened or under the strains of service.

BRISTO Safety Set Screws

These smaller sizes are not used as much as they should be, the impression persisting that a hollow set screw so small is not as reliable as a solid screw. This is not true of Bristo Safety Set Screws. They are made of specially heat treated steel that will not split and the patented dovetailed flutes give the wrench a grip on the screw that *actually holds the screw together!*

We recommend and guarantee Bristo Safety Set Screws in 1/8" and 3/16" sizes—as well as all larger sizes. May we send you samples for you to test?

THE BRISTOL COMPANY

Waterbury, Conn.

MACHINERY

Slitters and Slotters

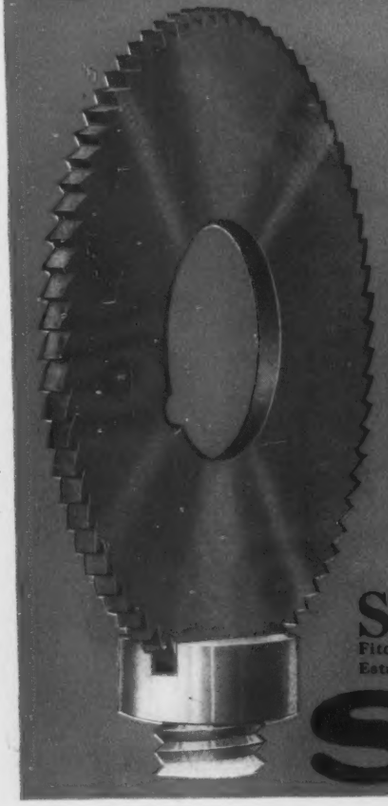

Simonds Semi-High Speed Steel Slitters serve a double purpose. Besides being used for metal slitting they are also practical saws for light cut-off work. They give much greater service than ordinary carbon slitters and have nearly all the cutting qualities of High Speed Steel Slitters, costing three times as much.

Simonds Screw Slotting Cutters are also as efficient for their particular duty.

Write for catalog and prices.

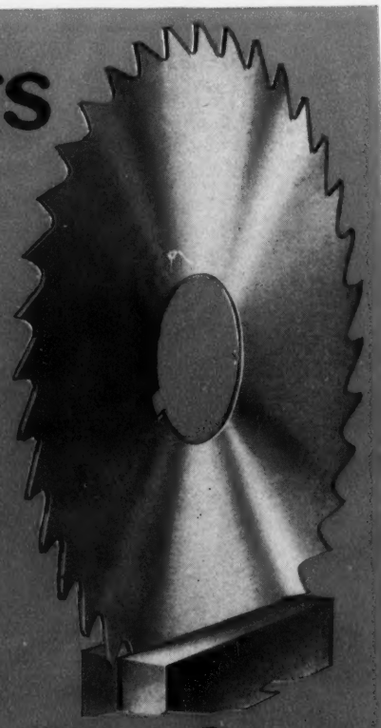

Simonds Saw and Steel Co.

Fitchburg, Mass.
Established, 1832

Chicago, Ill.
5 Factories

SIMONDS

A Shop Laboratory that Improves the Product

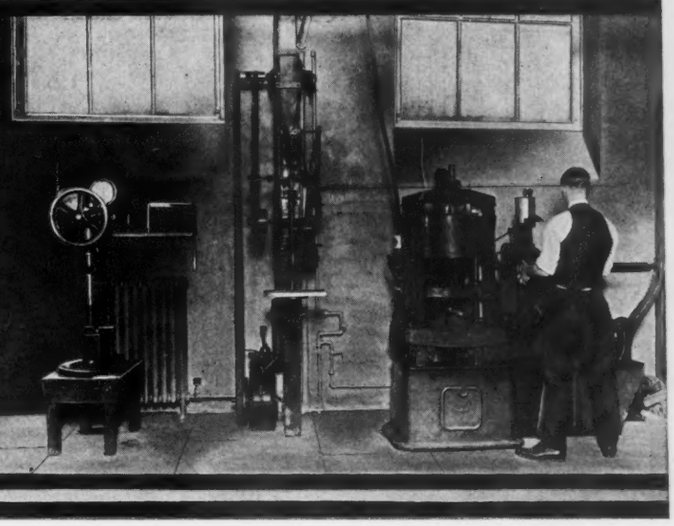

How the Metallurgical Laboratory at the Niles Tool Works Has Helped to Produce Better Castings

By CHARLES O. HERB

THE quality of any machine tool depends upon three things—design, workmanship, and materials. Usually the first two of these factors receive plenty of consideration, but sometimes insufficient attention is paid to the third. With the view not only of keeping a close check on the materials used in building machine tools but also of improving the quality of iron castings, the Niles Tool Works, Hamilton, Ohio, established a metallurgical laboratory that has given very satisfactory results.

Although the iron castings used in the construction of machines at the time the laboratory was first installed were considered good, it was decided to direct the main efforts of the metallurgist toward producing castings of closer grain and increased strength. It was soon found that although great advances had been made in the production of steel castings during the last few decades, comparatively few experiments had been made during the same time with heavy iron castings, and only meager information on this subject was recorded. However, after a considerable amount of research in the laboratory and thorough trials in the shop, castings are now produced that are much stronger than those previously made and that have a much finer appearance when machined.

According to specifications of the American Society for Testing Materials, a good iron for heavy castings is one having a transverse breaking strength of about 3300 pounds, and what is considered a high-test iron has a breaking strength of 3800 pounds. The usual run of castings now made at this plant has a transverse breaking strength of about 4200 pounds which is 400 pounds greater than the high-test iron mentioned and 900 pounds stronger than the iron recommended as being a good one for heavy castings. Several test bars have been made that did not break until a load of 5100 pounds was applied.

Fig. 1. Photomicrograph of a Cast-iron Specimen having a Transverse Breaking Strength of 3300 Pounds

Fig. 2. Photomicrograph of a Cast-iron Specimen having a Transverse Breaking Strength of 5100 Pounds

How Better Castings were Obtained

In working toward better castings, constant records were kept of everyday analyses and of many small mixtures of special analyses which were made for experimental purposes. Specimens were taken of the various mixtures for observation under the microscope and testing machine, and the results correlated, the question of grain being investigated particularly. It is only under the microscope that a true inspection of the grain of a casting can be made, because by this means alone is it possible to determine the true size of the graphite flakes which cause the surface pits. It has been proved that the smaller the graphite flakes and the more evenly distributed, the stronger the iron casting and the better its appearance.

In Figs. 1 and 2 are shown photomicrographs of cast-iron specimens having a transverse breaking strength of 3300 and 5100 pounds, respectively, the graphite flakes showing up black and the metal white. It will be seen that in the stronger iron the graphite flakes are much smaller, and more uniformly distributed than in the other specimen. The magnification of these photomicrographs is one hundred diameters.

The size of the graphite flakes was found to be controlled by both the

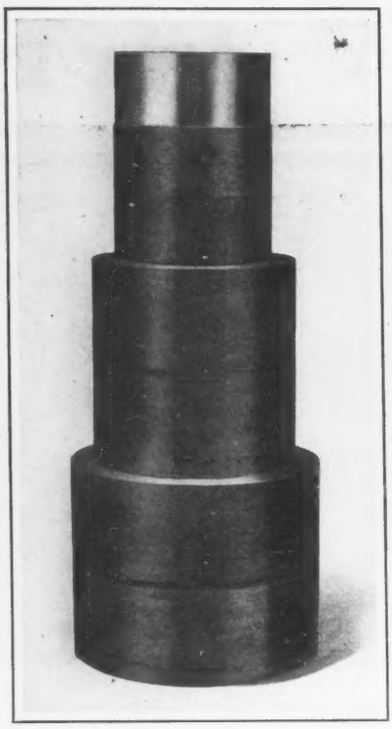

Fig. 3. Example showing that a Casting of High Finish is not necessarily of High Quality

analysis and the rate of cooling. The slower the cooling, and hence the longer the graphite flakes have to grow, the larger the grain size. This effect is controlled to a considerable degree by the analysis, but a section 4 or 5 inches thick will never have as close a grain as a good 1-inch section. The rate of cooling, and hence the grain size, varies from the outside to the center of the section. The result of this is best seen in large castings of heavy sections where the allowance for finish is large. On such a casting cuts are taken farther into the metal and the grain shows coarser than if only a light cut were taken. Sometimes due to design or to warping, a much deeper cut is necessary on some parts of a surface than on other parts, which results in different grain sizes showing up on the same surface.

The appearance of a finished casting often depends upon the method of machining, and so its structure cannot be judged accurately by simply observing the finished surface. To illustrate this point, the specimen shown in Fig. 3 was finished by different methods on the various surfaces. Heavy cuts tend to tear the graphite pits and thus increase their size, whereas light cuts or grinding will peen the metal over the pits so as to hide them. This is evident by observing the top end of the specimen, which was highly polished by grinding, giving the impression that the casting is of extremely close grain. However, on the second surface below the ground end, the grain is shown to be coarse, this surface being given only one finishing cut. The other surfaces show variations in finish due to depth of cut and number of finishing cuts. Of course, these statements are not intended to imply that all ground castings are of poor quality, but to show that because a casting has a high finish, it is not necessarily of exceptional quality.

In this connection it may be mentioned that the closer grain castings now produced at this plant have not increased machining costs. Although the metal is now tougher, no greater time is required to obtain a good finish than formerly. Also, some of the costs of foundry operation are somewhat less, due to certain economical methods developed. That the company is entirely satisfied that the work of the laboratory pays is evidenced by the fact that this work has been continued through the recent period of depression. The personnel of the laboratory consists of one graduate metallurgist and two assistants.

Routine Work of the Laboratory

All materials purchased for the shop are checked as to the analysis; alloy steels, for instance, are ordered to specifications, but before the bills are paid, the metallurgist must analyze the steel and approve the bill in so far as the quality of the steel is concerned. Tests are also conducted on bronzes, sand, lubricating oils, coke, coal, paint, etc., to see that the proper grade is being obtained. It is only by using uniform materials that uniform quality machines can be built, and this is the aim of the company. Every heat and mixture of cast iron is analyzed, tested for strength, and observed under the microscope, although a photomicrograph is not taken of each specimen. All data are carefully indexed so as to be readily accessible.

Procedure in Making a Test

The machinist who is unfamiliar with the work of a metallurgist will be interested in a brief description of some of the tests. For instance, when a part is to be machined to a given size within a tolerance of 0.001 inch, the tolerance seems very small, and yet under a microscope, with a magnification of 1000 diameters, one-millionth inch would look as large to the metallurgist as 0.001 inch does to the machinist when observed between the spindle and anvil of a micrometer. Thus if a 1000-diameter magnification measures 2 inches across, the actual width of the surface observed is only 0.002 inch.

In preparing for a microscopic test, the specimen is so cut as to have a flat surface, and then this surface is carefully polished to remove all tool marks and other scratches. Polishing may be done by first rubbing the specimen lightly on rough emery paper and then on finer grain papers until all marks are removed, reversing the direction of rubbing each time that the paper is changed. After the part has been smoothed in this manner, it is polished on a fabric-covered wheel coated with a paste made of alumina or tripoli powder and water. For the final finishing, zinc oxide, rouge, or fine alumina is used.

In Fig. 4 is shown a machine that facilitates the preparation of the specimen. The two emery wheels on the horizontal shaft are of different grain for smoothing the specimen and the cloth-covered top table is used for the final polishing. This table is driven through a vertical shaft, and is covered with zinc oxide or one of the other compounds mentioned. Then, with the table revolving, the part is held stationary on it until the proper finish is obtained. Next the specimen surface is subjected to the action of picric acid so as to contrast the combined carbon, ferrite, and phosphorus when the specimen is placed under the microscope. After this, the specimen is taken to the metallographic equipment, which consists essentially of a microscope, film camera, and arc light. Here the specimen can be readily examined and a photograph taken of the magnified surface.

For the transverse strength test, a standard bar 15 inches long and 1¼ inches in diameter is cast from the mixture that is to be investigated. This bar is placed as shown in Fig. 5, on two uprights, spaced 12 inches apart, on the table of a Riehle testing machine. After the bar has been positioned, an electric motor in the base is started to rotate two screws *A* which pull head *B* down on the bar. The load is then taken on the weighing table *C* and reduced through

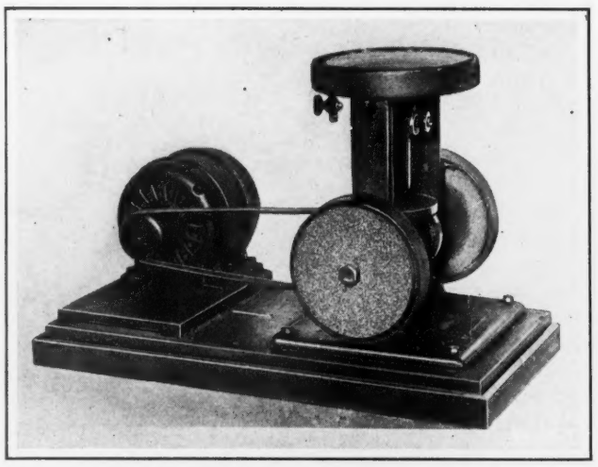

Fig. 4. Motor-driven Machine with Two Emery Wheels and a Fabric Covered Table for polishing Specimens to be examined under the Microscope

beams to the scale beam *D*, where it is balanced by poise *E*. There is a screw for driving the poise along the scale beam by hand. When the specimen breaks, the scale beam drops, the position of the poise indicating on the beam the load at which the rupture of the specimen occurred.

Reaching toward the front of the machine is an extensometer *F* which shows the deflection of the specimen in hundredths of an inch. This device has an adjusting screw which is placed against the under side of the specimen and the needle adjusted to zero on the scale. Compressive and tensile strength tests are made on the same machine. A full view of this testing machine may be seen in the heading illustration, which also shows a Brinell hardness tester at the left, and an upright drilling machine at the center. The latter is used to obtain chips from specimen bars before they are broken, in order to determine the analysis of the iron. These chips are subjected to various chemical processes in order to determine the amounts of the various elements.

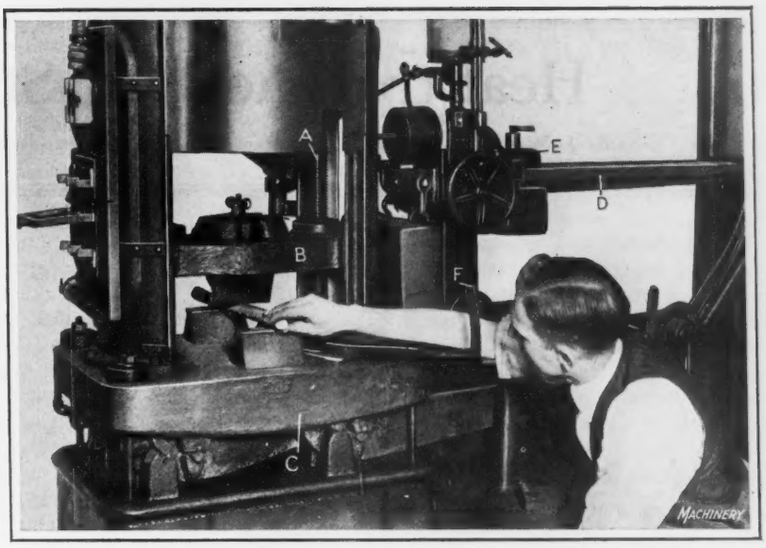

Fig. 5. Placing a Specimen Bar in a Testing Machine preparatory to determining the Transverse Strength and Deflection

Equipment for Chemical Analysis

Water, gas, vacuum, alternating and direct current, steam, and compressed air are available for the work of the laboratory. There are also electric muffle and combustion furnaces, electric and gas hot-plates, a steam bath, and special apparatus for metallurgical research. The equipment includes a complete line of chemicals and standardizing apparatus, and optical and thermo-couple pyrometric equipment for determining pouring temperatures and for use in heat-treatments. Then there are the three analytical balances shown in Fig. 6, which are of various degrees of sensitiveness. One of these will weigh as low as 0.00005 gram, the fineness of which can be better appreciated by the machinist when it is expressed as one ten-millionth of a pound. Even the finest hair causes an appreciable movement of the balances. Last, but not least, is a technical library, reference to which prevents time being lost in making experiments along lines that have been investigated by others.

* * *

Good packing campaigns have reduced freight losses from $125,000,000 to $50,000,000 in four years, according to an announcement made at a recent freight claim conference.

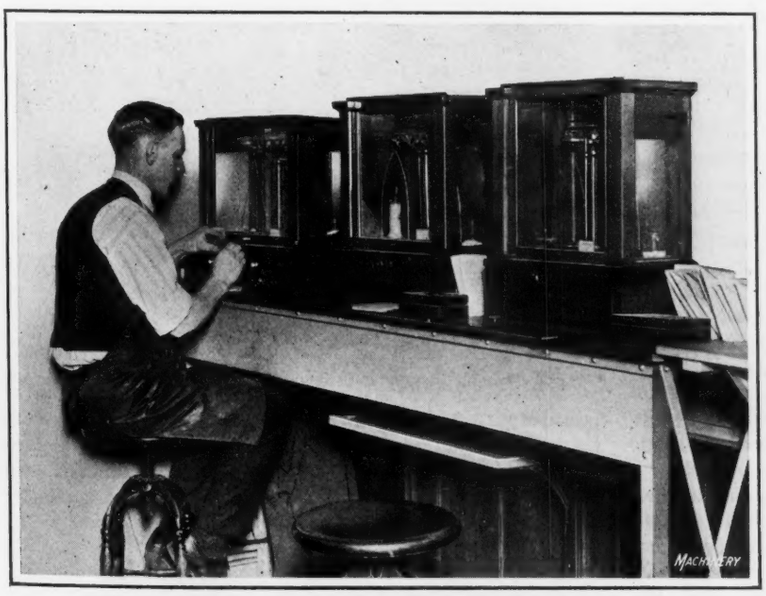

Fig. 6. Analytical Balances used in weighing out Minute Quantities of Materials

CONVENTION OF SOCIETY FOR STEEL TREATING

The American Society for Steel Treating will hold its sixth annual convention in Boston, September 22 to 26. All the morning sessions of the society will be held in the Copley-Plaza Hotel, and all the afternoon sessions at the Commonwealth Pier. The technical program contains an exceptionally large number of papers on almost every subject pertaining to steel and its treatment; altogether some forty papers will be presented. The papers are grouped, and each session deals largely with some particular phase of steel and its heat-treatment. Thus, for example, one session will pertain mainly to high-speed steel, another to salt baths as heating media; other sessions will deal with the metallurgical phases of the subject, with oil and gas as heating media, with the effects of heat-treatment and hardening processes, and with hardness testing. Stainless steel, metallurgical education, and numerous other subjects will also receive consideration. The complete program can be obtained by addressing the society's headquarters at 4600 Prospect Ave., Cleveland, Ohio.

* * *

One of the interesting ideas brought out at the World Power Conference in London related to the utilization of the internal heat of the earth as a source of power. E. W. Rice, Jr., honorary chairman of the board of directors of the General Electric Co., made the following remarks on this subject: "An interesting and important suggestion was made by Sir Charles Parsons in 1904, and again in 1919 when he proposed the boring of a great hole 10 or 12 miles deep in some convenient and suitable place, to utilize the internal heat of the earth. This suggestion should not be allowed to lie fallow. I heartily agree with Sir Charles in his statement that the cost of such an experiment is trivial compared with the value of the possible information which might be gained by the investigation into this unexplored region of the earth. The cost would be much less than that of a single battleship. If only the people and their representatives had the faith and vision of science, the value of such an idea would have been put to practical use long ago. It is a big idea, worthy of a nation's enthusiastic support; in fact, it is worth undertaking as an international scientific enterprise—a suitable subject for cooperative work between friendly nations."

Heat-treatment of Steel Springs

By J. W. ROCKEFELLER, Jr., Manager Spring Division, John Chatillon & Sons, New York City

IT has been found by experiment that the best heat-treatment for ordinary carbon steel springs is to quench at just above the critical range of the steel (from 1460 to 1480 degrees F.), and subsequently draw at a temperature of about 650 degrees F. While a combination of higher temperatures will increase the elastic limit of the steel, it will not produce as desirable a structure and the fatigue resistant

Fig. 1. Photomicrograph of 0.90 Per Cent Carbon Spring Steel in Annealed Condition

properties will be unfavorably affected. It is generally agreed by authorities that the practice of "flashing" springs is not ordinarily conducive to satisfactory results. Denison K. Bullens in "Steel and Its Heat-treatment," says: "For drawing the temper, it is never advisable to use the process known as 'flashing.' The practice of replacing the steel after quenching, in a high-temperature furnace until the outside of the steel reaches the desired temperature is one which cannot be too strongly denounced, because of the impossibility of uniform treatment. No time is allowed for the heat to soak to the center, with the result that the hardness increases from the outside—a most undesirable condition. All spring steel should be drawn back in a suitable low-temperature furnace maintained at the proper temperature. The steel should be kept in the furnace for a time sufficient to allow a uniform heating throughout. Lead baths and salt baths are used considerably for this work."

Factors that Affect the Heat-treatment

While, generally speaking, the properties to be borne in mind when recommending the heat-treatment of a spring are its elastic limit and fatigue resistance, there are other factors that affect to some extent the heat-treatment of springs. Usually it is important that a spring be kept straight throughout the heat-treating operation, as drastic working on the spring after heat-treatment, in order to overcome distortion caused by faulty handling in the thermal process, is likely to weaken the material. In certain types of extension springs, notably those used for governors and spring balances, it is desirable that there be no space between the coils and at the same time it is necessary that the spring give a uniform scale of loading. In such types, the skill of the operator plays an important part in the successful manufacture of the spring.

In making springs of ¼-inch wire or smaller, it is necessary that there be no decarburization of the steel during the process of heat-treatment. The smaller the wire used, the more important this factor becomes. In testing a gas oven furnace of the continuous type to determine whether it could be used in the manufacture of fine springs, it was found that its product was unsatisfactory due to decarburization of the steel. This was true in spite of the fact that the operator believed the atmosphere within the furnace to be reducing. In this case the wire from which the springs were coiled was No. 17 gage (0.054 inch in diameter), so fine that the decarburization of the outer layers reduced the average carbon content of the section from 0.86 to 0.76 per cent.

In an article such as this an elaborate description of the metallography and micro-structure of springs would hardly be of interest. On the other hand, some mention should be made of this important phase of any heat-treating operation. In the manufacture of steel wire springs, it is customary to start with the steel in the annealed condition. (This statement applies to such springs as valve and governor springs and not to the cheaper springs used in machine work, for which a coil of oil-tempered wire answers the purpose.) As a rule, the annealed wire is a eutectic steel with the cementite in the spheroidized state, as shown in Fig. 1. The spring, after coiling, should be heated and quenched at a sufficiently high temperature to produce martensite, as shown in Fig. 2. The drawing and final structure of the steel will depend largely upon the use to which the spring

Fig. 2. Photomicrograph of Same Carbon Spring Steel after hardening

is to be put. In some instances, a low drawing temperature that scarcely alters the structure of the steel is the best treatment, while in others the steel may be brought well within the troostitic range.

Heat-treatment for Alloy Steel Springs

Upon the treatment of alloy steel springs there is not such an abundance of opinions as with carbon-steel springs, due no doubt to the relatively small amount manufactured. Dur-

ing the last twenty years a number of alloy steels have been tried out for springs, among the most common being vanadium, chrome-vanadium, silico-manganese, molybdenum, chrome-molybdenum, and nickel. The addition of a third element, in general, makes advisable higher quenching and drawing temperatures than are common with ordinary carbon steels.

The heat-treatment recommended by the American Vanadium Co. for its type D chrome-vanadium steel is to quench in oil at a temperature of from 1600 to 1650 degrees F.; draw at from 750 to 850 degrees F. for from ten to twenty minutes; and then quench or cool in the air. The analysis of this steel is approximately as follows: Carbon, 0.43 to 0.52 per cent; manganese, 0.70 to 0.90 per cent; chromium, 0.80 to 1.10 per cent; and vanadium, 0.16 per cent or over.

A manufacturer of chrome-silico-manganese steel wire recommends material of the following analysis for springs: Carbon, 0.45 per cent; manganese, 0.65 per cent; silicon, 0.45 per cent; chromium, 0.81 per cent; sulphur, 0.02 per cent or less; and phosphorus, 0.02 per cent or less. The heat-treatment given is an oil quench at from 1650 to 1800 degrees F. and a draw at from 600 to 1200 degrees F.

A silico-manganese steel wire recommended for springs by another manufacturer is of about the following analysis: Carbon, 0.55 per cent; manganese, 0.75 per cent; silicon, 2 per cent; phosphorus, 0.03 per cent; and sulphur, 0.03 per cent. The heat-treatment for this steel is an oil quench at about 1600 degrees F. and an immediate draw at about 600 degrees F.

A foreign maker of various spring steels specifies hardening straight carbon spring steels in oil at a temperature of from 1470 to 1510 degrees F., and drawing for thirty minutes at a temperature of about 930 degrees F.

In general, it may be said that alloy steels have a higher elastic limit and better fatigue resisting properties than straight carbon steels, and since the amount of carbon they contain is small, they usually stand more abuse in heat-treatment before their physical properties are seriously affected. It is advisable for the manufacturer of springs who contemplates replacing carbon steel with an alloy steel to make thorough tests on the alloy steel in the sizes in which he expects to use it. The advantages that some alloy steels exhibit over carbon steels are not always so pronounced when the steel is in the form of fine wire.

Conclusion

Summing up briefly the recommended heat-treatments, we reach the following conclusions:

1. The most common practice in the heat-treatment of carbon steel springs is to quench in oil at about 1450 degrees F., and subsequently draw at from 400 to 800 degrees F.

2. The best fatigue resistant properties are developed in a 1 per cent carbon spring steel by quenching at from 1460 to 1480 degrees F. and drawing at about 650 degrees F.

3. The elastic limit of a spring steel may be increased by raising the quenching temperature at least up to 1600 degrees F.

4. In general, alloy steels require a combination of higher heat-treating temperatures than carbon steels, if their best properties are to be brought out.

* * *

The National Industrial Conference Board points out that in recent years the number of industrial accidents has increased, this statement being based on a recent report of the U. S. Department of Labor. It is possible, however, that there has not been an actual increase in the number of accidents, but rather that accidents are now more accurately reported. According to the compilation of the National Industrial Conference Board, the wage loss due to accidents on account of working days lost amounts to over $1,000,000,000 a year, the number of days lost being over 225,000,000.

CONSTRUCTING SHOP TRAYS FOR SPECIFIC USE

By ERNEST L. HOLCOMB

In modern manufacturing plants, special wooden trays or boxes are often used to hold finished parts or assembled units. When such trays are made with inside cleats attached to the bottom boards they are not likely to be used for other purposes than those intended, but if the cleats or slots for holding the parts are attached to the sides of the tray there is a temptation to use the special tray for various parts that should be handled in the less expensive standard tray or box.

This is likely to happen in spite of the fact that the name of the part for which the tray should be used and the number of the department to which it should be returned are stenciled on its side. Doubtless when such a tray is borrowed, the borrower intends to use it only temporarily, and does so because a standard tray is not available at the time, but unless the matter is checked up several times each year, the number of special trays and boxes that are diverted from the use for which they were intended will be large.

If the tray or box can be made with an opening in the center of the bottom, as shown at *A* in the accompanying illustration, the temptation to use it for other purposes is avoided. At least one prominent manufacturer of machines with many japanned and nickeled parts makes special trays and boxes this way whenever possible. The style of tray shown in the illustration is for holding plates that must not be marred during the sub-assembling and the final assembling operations, which are performed after the plates have been japanned. The slotted bottom makes the tray lighter, and saves lumber without sacrificing strength.

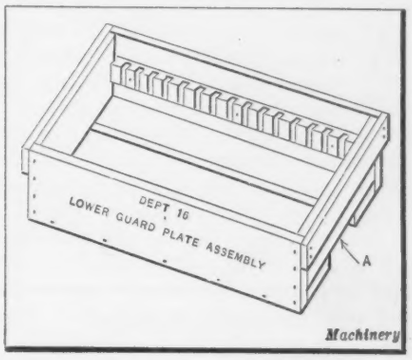

Shop Tray with Slotted Bottom

Sometimes a tray is designed to carry a double row of small boxes when small parts are used in sets. In such cases the bottom of the tray should have two slots, one under the center of each row of small boxes. No definite rule can be laid down, as the individual conditions call for individual treatment. One or more openings may be provided in the bottom of the tray or shop box, either lengthwise or crosswise, but the single lengthwise opening will be found best in the majority of cases where this idea can be applied.

* * *

AIRPLANE ENGINE FOR COLD CLIMATES

An airplane engine especially suitable for flights in cold climates has been developed by the Bristol Aeroplane Co., Ltd., Bristol, England. According to *Engineering*, a 400-horsepower Bristol "Jupiter" airplane engine has been tested by the Swedish government to ascertain its suitability for employment under Arctic conditions. The tests were carried out early in the year at Kiruna, which is within the Arctic Circle. It is stated that the trials were successful and that in one final test the machine, which had been left in an open shed over night, with the temperature at 4 degrees below zero, Fahrenheit, was started up in the morning on the second swing of the propeller, and the machine was flown shortly afterward a distance of 806 miles in 6½ hours, the pilot reporting on arrival that the engine worked perfectly. It has since been purchased by the Swedish government which previously had experienced much difficulty in operating airplane engines under Arctic conditions.

Planetary Gearing

By FRANKLIN DeRONDE FURMAN
Professor of Mechanism and Machine Design
at Stevens Institute of Technology

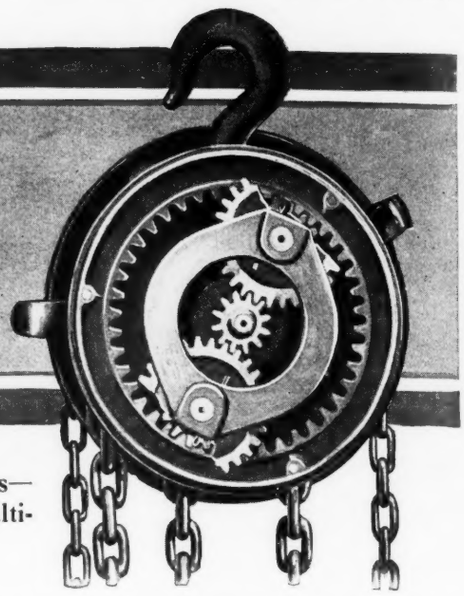

Review of Principles—Racks as Driving and Fixed Members—Double Planet Wheels—Use of External Gears Only—Multiplying and Reversing Actions—Second Article

AN outline of the status of the subject of planetary gearing in relation to other subjects that fall under the general heading of mechanism was given in the first installment of this series in August MACHINERY. Various uses for planetary gearing were also enumerated; definitions and elementary principles were given, and three general methods of solving planetary gearing—graphical, geometrical, and analytical—were discussed in detail. Also three groups of problems, depending on the characteristic structural detail of a planetary gear mechanism, were explained with a view to pointing out that all possible problems in the subject must fall in one of these three groups. Having determined the group to which a problem belongs, the manipulation of the basic formula to adapt it to the problem in hand becomes a simple matter. A definite problem in planetary gearing, belonging to the first of the three groups, was then taken up and solved by each of the three methods previously mentioned.

Problem 2 and its Graphical Solution

This article deals first with a problem intended to review the elementary principles used in the simple problem given previously. The remaining problems in the article are all confined to Group 1, as referred to above, and they illustrate characteristic methods of treatment when (a) the sun wheels become racks; (b) two planet wheels instead of one are used; (c) all external gear wheels are used; (d) a multiplying action instead of a reducing action is obtained; and (e) a reversing action is obtained. The notation used in this article is the same as in the August installment. For convenient reference it is given in the following:

N = number of turns of driver to one of follower or driven member;

D = diameter of pitch circle of driver, if driver is a toothed wheel; (The driver, or the follower, may be the "train arm" and not one of the toothed wheels, according to the data of a problem.)

D_2 = diameter of pitch circle of fixed wheel;

D_3, D_4, etc., = diameters of pitch circles of planetary wheels.

Problem 2—Given: $D = 36$ (internal); $D_2 = 20$; $D_3 = 8$ (see Fig. 4). Find N by graphical and analytical methods.

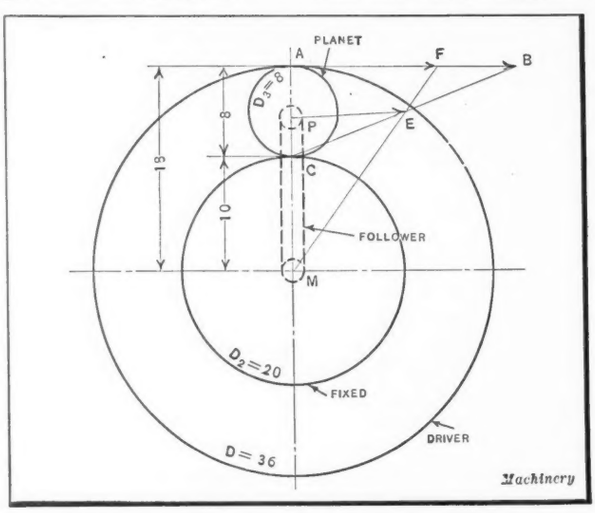

Fig. 4. Application of Graphical Method to Problem 2

The graphical solution of Problem 2 is shown in Fig. 4. The explanation of the graphical work for this problem is identical in principle with that given in connection with Problem 1. In starting Problem 2, the assumed linear velocity of the point A of the driver is put down at AB, and the corresponding linear velocity of the point P of the train arm is found as shown at PE. These are the linear velocities of the actual points A and P on the driver and follower members, respectively. To make them comparable in terms of angular velocity, or what is the same thing, in terms of revolutions per minute, these velocities must both be read at the same radius. Then if the follower arm MP is considered extended in length, the point A on the arm would have a linear velocity equal to AF. Therefore, by noting to any scale, the distances AB and AF, we have a measure of the relative revolutions per minute for driver and follower, respectively. Thus,

$$N = \frac{AB}{AF}$$

For example, if AB measures 10 inches to the scale adopted, and AF measures 6.4 inches; $N = \frac{10}{6.4} = 1.56$ approximately; hence if the driver is turning 1000 R.P.M., the follower will be turning 640 R.P.M., approximately.

The same relative results would have been obtained had the velocity AB been reduced to correspond with the radius MP, by drawing a line from B to M and noting the length of line cut off on PE extended. This length of line would then have been compared with PE and the same relative angular velocities obtained. It is important to mark the result obtained by the graphical method "approximate."

The analytical solution of Problem 2 involves the use of the standard Equation (3) given in the preceding article. Thus

$$N = 1 + \frac{D_2}{D_3} \times \frac{D_3}{D} =$$

$$1 + \frac{20}{8} \times \frac{8}{36} = 1\ 5/9$$

The explanation of the processes and steps involved in writing the standard equation is identical in principle with that given in connection with Problem 1.

When Driving and Fixed Members are Racks—Problem 3

Problem 3—Given: D = infinity (a rack gear); D_2 = infinity (also a rack gear); $D_3 = 16$. Find N by the graphical and analytical methods.

Problems such as No. 3 may appear to a casual observer as purely academic, but they are the reverse. There is, perhaps, in all practical engineering work no type of planetary gear more widely used than the one represented in Problem 3. This problem also illustrates the practical value that may sometimes be derived by following a general case of any particular type of mechanism to its logical limit of construction. For example, if one of an inventive or mechanically inquisitive type of mind were solving Problem 1 or 2, it might naturally occur to inquire what the result would be if the radii of wheels D and D_2 were made very large; so large in fact that MA and MC (Fig. 4) would become infinite in length, in which case the circles representing these two wheels would become straight horizontal lines. In practice, these would be rack gears.

With two parallel racks, one fixed and the other movable in the direction of its length, and with a pinion between the two racks, one familiar with the mechanisms used on many sliding elevator doors will readily recognize the practical significance of Problem 3, which is illustrated in Fig. 5. This mechanism is also frequently found in various classes of machinery where parallel straight-line motions of two objects are desired, one to move with half the speed of the other. The last statement, of course, gives the answer to Problem 3, but it is further required that the problem be illustrated diagrammatically in the simplest manner and solved by the graphical and analytical methods with all the steps entered. The methods of solution in this case are identical with those previously explained in connection with Problems 1 and 2.

Graphical Solution of Problem 3

For the benefit of those not familiar with the method of handling infinite values in graphical or analytical work, or both, a word may be added to aid in the solution of Problem 3. In the graphical method, it will be observed that as the radii AM and CM grow larger (Fig. 4), the line MEF, which must pass through the definite point E, will become more nearly vertical, and when M is at an infinite distance, the line MEF will be parallel to MPA. Then, since PE is one-half AB, the line MEF, when drawn, will cut the line AB at F so that AF will be one-half AB. Therefore

$$N = \frac{AB}{AF} = 2,$$

or in other words, the rack D in Problem 3 which carries door No. 1, Fig. 5, will travel with twice the velocity of the bar connecting the centers of the planet wheels. The latter bar carries door No. 2.

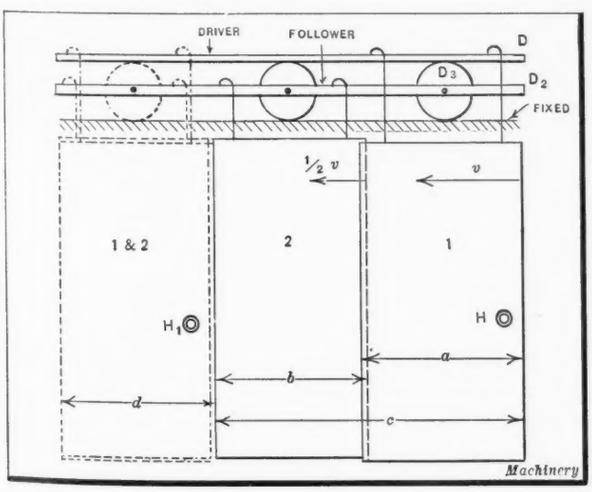

Fig. 5. Use of Racks for Driving and Fixed Members as applied to Elevator Doors—Problem 3

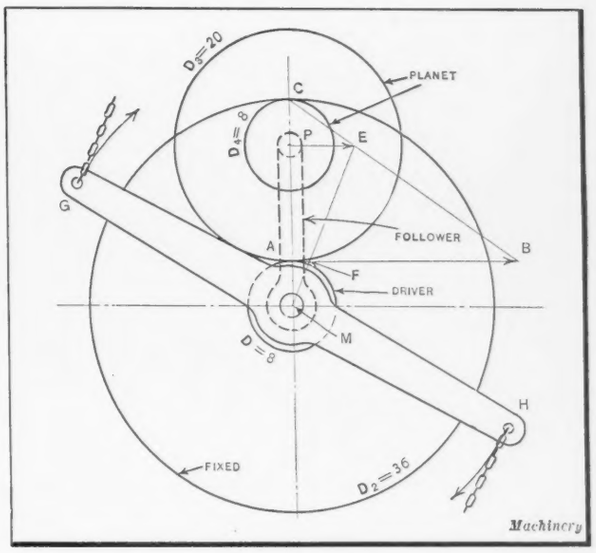

Fig. 6. Planetary Gearing having Two Essential Planet Wheels—Problem 4

Analytical Solution of Problem 3

In using the analytical method for solving Problem 3, the fundamental formula $N = 1 + \frac{D_2}{D_3} \times \frac{D_3}{D}$ is used. As the diameters of the rack wheels D_2 and D are infinite, the infinity signs are inserted in the formula, thus obtaining:

$$N = 1 + \frac{\infty}{16} \times \frac{16}{\infty} = 1 + 1 = 2$$

It is evident, therefore, that the driver D, as controlled by door No. 1, Fig. 5, has twice the velocity of the follower, which is represented by door No. 2. When the operator moves the handle H of door No. 1 to H_1, it will have moved the distance c, and door No. 2 will have moved the distance b; one door will be back of the other, giving distance c as the width of the passageway.

Double Planet Wheel on One Pin—Problem 4

The problems of Group 1 that have been given thus far consist essentially of three wheels, namely, a driver, a fixed wheel, and one planet wheel. There is no change in principle nor in general method of construction when there are two planet wheels of different sizes instead of one, as illustrated in the next problem. When there are two essential planet wheels, they are integral with each other on the same axis, as may be understood by considering that the two planet gear wheels D_3 and D_4 in Fig. 6 are integral and turn on the planet pin P.

Problem 4—Given: $D = 8$; $D_2 = 36$ (internal); $D_3 = 20$; and $D_4 = 8$. Find N by the graphical and analytical methods.

Graphical Solution of Problem 4

The graphical solution of this problem is shown in full in Fig. 6, and with an understanding of the preceding problems, should be readily followed provided the mechanism itself is understood. This problem illustrates a mechanism generally known as Bogardus's planetary horsepower gear. Horses were hitched at the two ends G and H of a long pivoted bar to which was rigidly fastened a toothed wheel D which acted as the driver of the planetary gear mechanism. As D rotated on its axis M, it caused the two toothed planet wheels D_3 and D_4 to roll as one body on the internal toothed wheel D_2 which was fixed to the frame of the mechanism. Thus the pivot P of the planetary wheels was made to revolve at a comparatively slow rate about M, and this slow motion of the point P was transferred to a separate follower shaft through the train arm shown by dotted lines. The velocity lines in Fig. 6 show that if a point A on the pitch

surface of the driving wheel D has a tangential linear velocity represented by the line AB, the point A on the train arm will have a tangential linear velocity represented by AF; consequently, the number of revolutions of the driver to one of the follower will be $N = \frac{AB}{AF}$. By measuring AB and AF to any common scale, N will be found to equal $\frac{10}{0.9} = 11.1$ approximately.

Analytical Solution of Problem 4

The analytical solution of Problem 4 calls for the same general formula as was used in previous problems, with the exception that there are now two planet wheels instead of one, and consequently one D_3 in the preceding formula becomes D_4 instead. This will be deduced mathematically in the next paragraph. For the present analysis, it is only necessary to note that when the fixed sun wheel D_2 (Fig. 6) is turned back, it turns the small planet wheel D_4 a number of times equal to $\frac{D_2}{D_4}$. This causes the large planet wheel D_3 to turn the same number of times. For every turn of the large planet wheel D_3, the small sun wheel D turns $\frac{D_3}{D}$ times. Therefore when the fixed wheel D_2 is turned backward through 360 degrees, the driving wheel D will be turned $\frac{D_2}{D_4} \times \frac{D_3}{D}$ times. The standard formula for solving the problem now becomes

$$N = 1 + \frac{D_2}{D_4} \times \frac{D_3}{D} \qquad (5)$$

Substituting the given values in this formula,

$$N = 1 + \frac{36}{8} \times \frac{20}{8} = 12\tfrac{1}{4}$$

This problem illustrates the necessity of introducing D_3 into the numerator and denominator of the last term of Equation (3) of the preceding article, so as to give a general formula that will apply when two essential planet wheels are used instead of one wheel. The mathematical deduction for Formula (5) is as follows: $N = \frac{AB}{AF}$ (see Fig. 6). In the two sets of similar triangles, ACB, PCE and PME, AMF, $\frac{AB}{PE} = \frac{AC}{PC}$ and $\frac{PE}{AF} = \frac{PM}{AM}$, from which $\frac{AB}{AF} = \frac{AC \times PM}{PC \times AM}$. Denoting the radii of the several sun and planet wheels by the letter R, with proper sub-scripts, $AC = R_3 + R_4$; $PM = R_3 + R$; $PC = R_4$ and $AM = R$. Hence

$$\frac{AB}{AF} = \frac{(R_3 + R_4) \times (R_3 + R)}{R_4 \times R} = \frac{R_3^2 + R_3R_4 + R_3R + R_4R}{R_4R}$$

$$= \frac{(R_3 + R_4 + R)\,R_3 + R_4R}{R_4R}$$

But $R_3 + R_4 + R = R_2$; therefore $\frac{AB}{AF} = \frac{R_2R_3 + R_4R}{R_4R} =$

$$1 + \frac{R_2R_3}{R_4R} = 1 + \frac{D_2 \times D_3}{D_4 \times D}$$

Use of External Gears Only—Problem 5

In the preceding problems, an internal gear wheel has been used in each case and the formula used in the analytical or third method has included a plus (+) sign only. In several problems which follow all wheels will be external wheels, and a study of each problem, in accordance with the general explanation in the first article, will show that the sign changes from + to — in these cases. If all planetary gear mechanisms were confined to the use of the train arm as the follower, or as the driver, it would be a simple matter to formulate a rule as to when to use the + or the — signs; but in many cases the train arm is simply an idler, and a rule as to the use of these signs in such cases is not easy to formulate so as to apply to all cases. Even if it were a simple matter to formulate a rule for all fundamental cases, such unfamiliar combinations of gears would arise as to confuse one in the abstract application of the rule, and it is much better, considering the subject as a whole, not to attempt to make a rule for the placing of a plus or minus sign in solving the problems in planetary gearing. Nor is a rule necessary, for the general analysis, when once thoroughly understood, may be quickly applied in any planetary gear combination that may present itself.

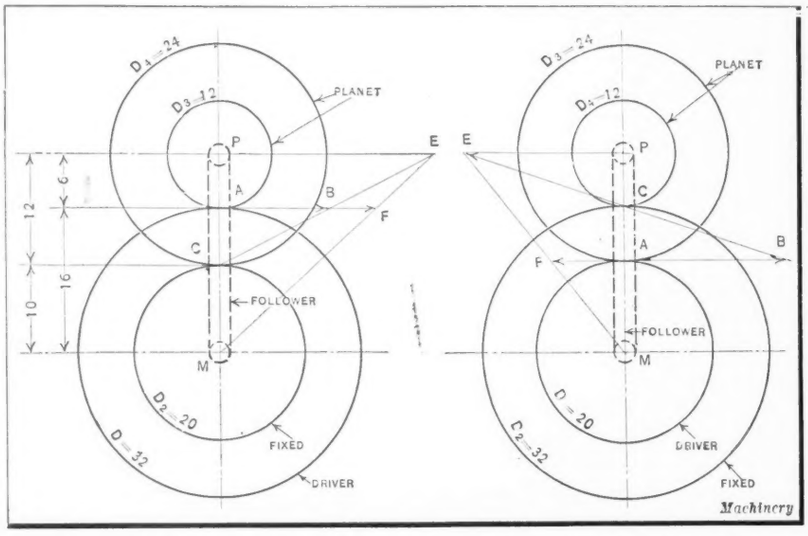

Fig. 7. Combination of External Gears which multiply Motion in the Same Direction—Problem 5

Fig. 8. Gears arranged to reduce Motion in Opposite Direction—Problem 6

Problem 5—Given: $D = 32$; $D_2 = 20$; $D_3 = 12$; and $D_4 = 24$ (see Fig. 7). Find N by the graphical and analytical methods.

The construction for the graphical method is shown clearly in Fig. 7. After determining dimensions AB and AF by measurement, the value of N is obtained approximately. Thus

$$N = \frac{AB}{AF}$$

Solution of Problem 5 by Analytical Method

Problem 5 involves the use of the minus sign instead of the plus sign in the formula for the analytical method. The following explanation is but a review of the general principles previously dealt with and now applied under slightly different conditions. In the present problem, the general formula to be used is:

$$N = 1 - \frac{D_2}{D_4} \times \frac{D_3}{D} \qquad (6)$$

The numeral 1 in the right-hand half of the equation is obtained by considering that all the parts of the mechanism, Fig. 7, are immovable with respect to one another and then that the whole device is rotated once, clockwise, as a solid mass about M as an axis. Then the follower train arm MP turns once while the driving wheel D turns once so that $N = 1$.

The wheels are next considered to be free to turn on their respective axes, and the fixed wheel D_2, having been turned once in the foregoing operation, is turned back counter-

clockwise while pin P remains stationary. This causes planet wheel D_4 to turn clockwise, planet wheel D_3 also to turn clockwise, and driving wheel D to turn counter-clockwise or in a direction opposite to the movement when the entire mechanism was turned as a unit. Hence the fixed wheel has the effect of turning the driver *counter-clockwise* $\frac{D_2}{D_4} \times \frac{D_3}{D}$ turns while the follower train arm MP goes through one full turn *clockwise*, and this quantity must be subtracted from 1, as indicated in Formula (6). Applying the general formula (6) in Problem 5, and substituting the values given in the data,

$$N = 1 - \frac{20}{24} \times \frac{12}{32} = \frac{11}{16}$$

Therefore driver D makes $\frac{11}{16}$ of a turn while the train arm follower MP makes one turn. This, it will be noted, is a *multiplying* action produced by the planetary gear mechanism instead of a reducing one, as in previous problems.

The deduction for the general formula used in the preceding problem is as follows: $N = \frac{AB}{AF}$ (see Fig. 7). In the two sets of similar triangles ACB, PCE and AMF, PME, $\frac{AB}{PE} = \frac{AC}{PC}$ and $\frac{PE}{AF} = \frac{PM}{AM}$ from which $\frac{AB}{AF} = \frac{AC \times PM}{PC \times AM}$. Using the letter R with the proper sub-scripts to designate the radii of the several wheels, $AC = R_4 - R_3$; $PM = R_3 + R$; $PC = R_4$; and $AM = R$. Substituting these values

$$\frac{AB}{AF} = \frac{(R_4 - R_3) \times (R_3 + R)}{R_4 \times R} = \frac{R_3R_4 - R_3^2 + R_4R - R_3R}{R_4R} =$$

$$\frac{R_4R - R_3(R + R_3 - R_4)}{R_4R}. \quad \text{But } R_3 + R - R_4 = R_2\text{: therefore}$$

$$N = \frac{AB}{AF} = \frac{R_4R - R_3R_2}{R_4R} = 1 - \frac{R_3R_2}{R_4R} = 1 - \frac{D_2}{D_4} \times \frac{D_3}{D}$$

Graphical Method Applied to Problem 6

Problem 6—Given: $D = 20$; $D_2 = 32$; $D_3 = 24$; and $D_4 = 12$ (see Fig. 8). Find N by the graphical, geometrical, and analytical methods.

The graphical construction for Problem 6 is shown in Fig. 8. The pitch circle of the driving wheel has a linear velocity represented by AB. This is also the linear velocity of the pitch circle of the planet wheel D_3. Since the planet wheels D_3 and D_4 are rigid with respect to each other, and since the teeth of the planet wheel D_4 are in gear with the teeth of the fixed wheel D_2, the point of contact of the meshing teeth at C becomes the instantaneous center about which the velocity AB of the planet wheel mass takes place. As a result, the point P of the planet wheel mass must have a velocity PE in the opposite direction from AB.

Inasmuch as the point P is also a point on the follower train arm, PE becomes the linear velocity of a point on the follower at a radial distance MP. The linear velocity of a point on the follower at the distance MA, which is the distance at which the original driving velocity was taken, is found to be AF. Therefore, the fraction $\frac{+AB}{-AF}$ gives the ratio of linear velocities of the driver and follower at the *same radial distance*, which is the same as the ratio of the angular velocities, measured in the ordinary terms of revolutions per minute. The directions of turning are indicated by the plus sign for a clockwise direction and by the minus sign for a counter-clockwise direction. If distances AB and AF measure 0.9 inch and 0.4 inch, then the numerical answer for Problem 6, solved by the graphical method, is found to be $N = \frac{+0.9}{-0.4} = -2.25$ approximately; in other words, 2.25 turns of the driver shaft in one direction will produce one turn of the follower shaft in the opposite direction.

Geometrical and Analytical Solutions of Problem 6

The geometrical method of solution calls for a graphical construction similar to that shown in Fig. 8, the only difference being that the drawing need not be to scale. In the geometrical method there are two distinct pairs of similar triangles that are made use of, as, for example, the triangles CAB and CPE, and also the triangles MPE and MAF.

In the first pair, $\frac{AB}{-PE} = \frac{AC}{CP}$, and in the second pair $\frac{-PE}{-AF} = \frac{PM}{AM}$. Combining formulas, $\frac{AB}{-AF} = \frac{AC}{CP} \times \frac{PM}{AM}$.

Substituting the values given, $AC = 6$, $PM = 22$, $CP = 6$ and $AM = 10$, we have $N = \frac{AB}{-AF} = -\frac{6 \times 22}{6 \times 10} = -2\ 1/5$.

In these formulas, the minus sign is used whenever a velocity line has a counter-clockwise direction. For example, the velocity line AB is to the right, giving clockwise motion, while PE and AF are to the left, giving counter-clockwise motion; hence, the driver makes 2 1/5 turns clockwise while the follower turns once counter-clockwise.

The analytical method of solution for Problem 6 has already been explained briefly for a similar basic problem (5), and therefore only the actual solution will be given:

$$N = 1 - \frac{D_2}{D_4} \times \frac{D_3}{D} = 1 - \frac{32}{12} \times \frac{24}{20} = -2\ 1/5$$

* * *

TINNING WIRE PARTS

By AXEL HALVORSEN

The tinning of wire shapes and stampings, from both hot and cold-rolled stock, has been accomplished successfully in the following manner: After the pieces to be tinned have been thoroughly cleaned by pickling, they are dipped in a flux made from muriatic acid in which has been dissolved as much zinc as will be held in solution. The work is then ready to be immersed in the molten metal.

The tinning kettle used is 16 by 36 by 18 inches in size. On the molten tin is poured a solution of chloride of zinc in which is dissolved Fines' white sal-ammoniac. The solution is made as follows: To three quarts of chloride of zinc solution, add enough sal-ammoniac to fill a one-gallon receptacle. When this mixture is poured on the molten tin, it spreads all over the metal and keeps the tin from oxidizing. In the course of a five-hour run it begins to become lumpy. The lumps must then be skimmed off and some more of the mixture poured on. One gallon of the solution is sufficient for a ten-hour run. By using this mixture on the molten tin, the tin bath can be kept at a temperature of between 650 and 700 degrees, and the work comes out of the bath bright and without any foreign matter adhering to it.

We have found it necessary, on filling up a tank with new metal, to boil the tin for from three to four hours, using raw potatoes which are held at the bottom of the kettle in a basket. The moisture from the potatoes boils up through the molten tin and removes any impurities.

After much experimenting, we have found that the best medium for washing stampings after tin-coating is a soap solution consisting of from four to five pounds of soap chips to one hundred gallons of rain water. This solution is kept boiling by means of a steam coil. Kerosene will give a somewhat brighter finish, but for our regular work we employ the soap solution with excellent results.

The writer has been engaged in tinning for the last four years, and has been confronted with many problems for which various solutions have been tried, but the method described in the foregoing has been found to give the best and most uniform results.

Continuous Heat-treating Furnaces

By HOWARD M. GROFF, Treasurer, The Buch-Groff Co., Trenton, N. J.

CONTINUOUS heat-treatment has possibilities and advantages that can be utilized in a great many more industries than those in which it now figures prominently. Generally, the heat-treatment of a part precludes any possibility of further work on it except grinding and lapping; but such rapid strides have been made in the art of grinding and its application that many things heretofore considered impossible are now of daily occurrence. As an example, the continuous process of heat-treatment has recently been applied successfully to the production of small flat drills for drilling non-ferrous metals. Here the wire is hardened, tempered slightly in the coil, and fed from the coil through an automatic machine, where abrasive wheels grind the relief or back taper, flats, and cutting edges, and finally cut the drills off. The additional working of the hardened wire by the wheels seems to impart increased life to the drills.

In a punch press job on thin strip previously heat-treated, it has only been necessary to rig up a spot-welder or gas-heated irons to touch the strip at points where a thorough softening is required, such as for a sharp bend or delicate piercing. This softening is done during the up stroke of the press, and can be so accomplished that the soft spot registers correctly with the proper parts of the punch and die. The foregoing is simply to emphasize the possibilities of continuous heat-treatment; in the following will be described a small furnace of the bench type for hardening and tempering round wire or flat stock of the smaller sizes, and also a furnace for handling individual parts. Both furnaces may be gas or electrically heated.

In the first furnace, the hardening and tempering are conducted separately, because for higher quality work, it has been found that proper tempering cannot be accomplished at the same rate of speed as hardening. For tempering a slower feed through a lower heat gives far better results than a faster feed and a higher heat. It has also been found important to quench the material from the tempering heat.

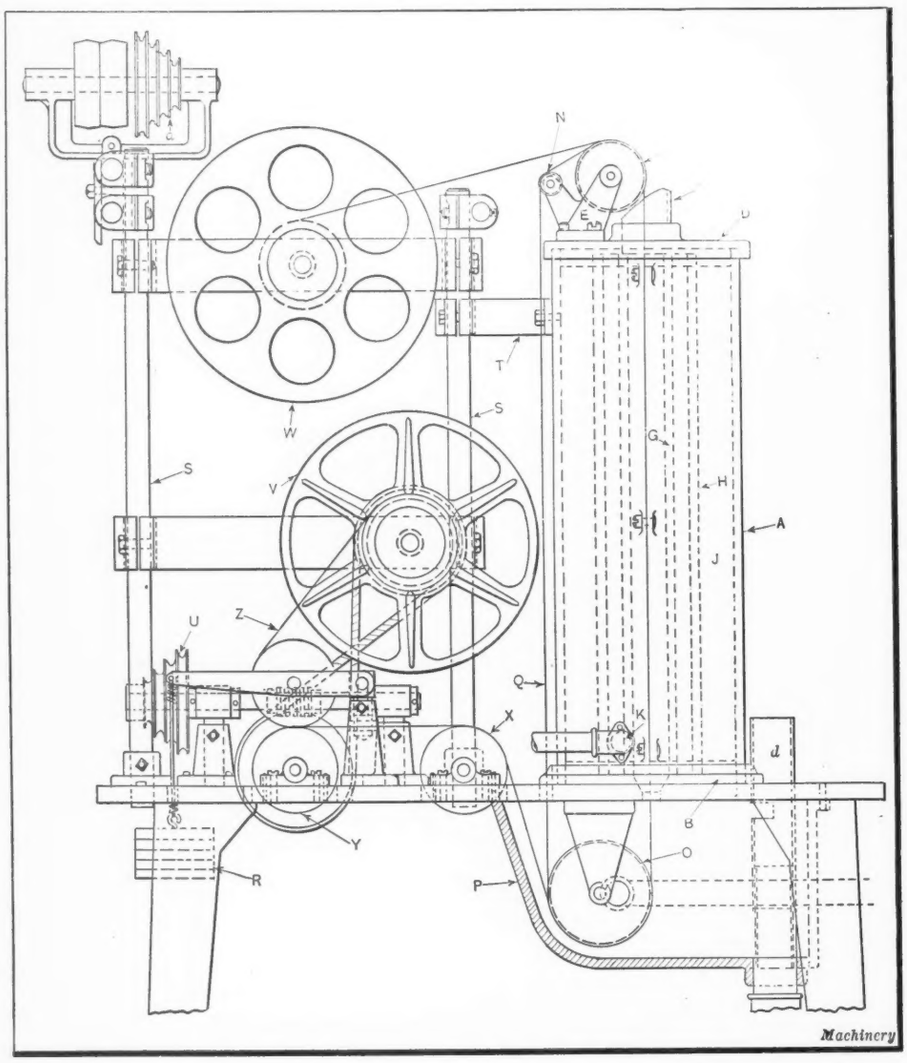

Fig. 1. Continuous Heat-treating Furnace which may be heated by Gas or Electrically for hardening and tempering Wire or Strip Stock

Continuous Wire or Strip-stock Heat-treating Furnace

The hardening and tempering units of the strip-stock heat-treating furnace are identical, and are mounted in pairs so that one reel can be hardened while another reel is tempered in the next furnace. However, both units can be used for hardening, in which case the wire is "aged" a bit before tempering. From Figs. 1 and 2 it will be seen that the stock is drawn from a reel *W* to an idler pulley, then down through the furnace contained in housing *A*, over another idler to feed rolls, and finally wound on reel *V*. The heating unit consists of the cast-iron tube *A*, which is split longitudinally, bolted on the side, and set into a ring *B*, held by screws to the baseplate *C*. Tube *A* is capped by a cast-iron cover *D* which holds a bracket *E* and an exhaust pipe *F*. There is an inner fire-tube *G* made of crystolon, which is 2 inches inside diameter and has a ½-inch wall. A 1-inch fire space is provided around tube *G* surrounded by the 5-inch crystolon tube *H*, which is backed by ¾- to 1-inch fire-brick. In space *J*, "Sil-O-Cel" powder, with a melting point of about 2930 degrees F., is tamped between the wall of tube *A* and this line of fire-brick.

In order to position and support this assembly, top and bottom pieces of "Hytempite" and carborundum are molded to fit the tubes. The top member is turned to suit the fire space between the tubes *G* and *H*, and has a vent to the exhaust pipe *F*. The gas entrance *K* is near the base, and so located that the center line is tangent to the center line of the fire space, as will be apparent from Fig. 2. The

opening for the gas-feeding tube is drilled through after the furnace is assembled, using the hole in the outer tube as a guide. Fig. 2 also shows the location of a fire-clay plug *L*, which is removed for lighting purposes and for observing the intensity of the heat, although in most instances the heats are controlled by means of a pencil-type thermo-couple suspended in the inner tube.

Fastened to the top cap on bracket *E* are idler rollers *M* and *N*, and there is a lower idler *O* fastened to a bracket attached to the lower side of base *C*. This idler extends down into tank *P* which contains the quenching bath. The threading tape *Q*, whose use will be described later, lies at the bottom of the grooves in idlers *M*, *N*, and *O*, so that its outer surface is about tangent to the center of tube *G*. Tape *Q* is flat and made of a heat-resisting metal, such as pure nickel. In treating strip stock, it is important that the upper and lower rolls *M* and *O* are in the same plane and square with each other, for if this is not so, a slight twist will show up in the hardened strip metal that cannot be removed by subsequent tempering or working.

A novel feature of this furnace is the arrangement for threading the wire through the furnace. It sometimes happens, in the process of heat-treating, that the wire breaks and causes considerable trouble in feeding the loose end down through the furnace and the quenching bath. The furnace in such instances is hot, and time cannot be taken to wait until it cools. To facilitate this feeding, tape *Q* is perforated at intervals, and the flat strip or wire to be heat-treated is hooked into one of these perforations. By gripping the tape and the stock with pliers, the stock is carried around idler *O* and can be fed to the feed rolls, after which the machine automatically takes care of it.

Set into baseplate *C* in front of the furnaces, are four pipes *S* which are braced with cross-members, four of which carry the reels *V* and *W*. The furnaces are braced by forgings *T* which extend from the rear cross-bar to the furnace casing *A*. Directly ahead of the heating units and fastened to the base in alignment with the lower roll of the furnace is an idler *X* over which the stock passes to the feed rolls *Y* and *Z*. The lower feed roll is mounted on a bracket fixed to the base, while the upper roll is carried by a lever that holds it against the lower roll by means of adjustable weights *R*. These weights furnish the necessary pressure for drawing the stock through the furnace. The lower reel *V* is furnished with interchangeable covers so as to accommodate stock of various widths. The reel must be in the same plane as the idlers of the furnace and the feed rolls.

The lower reel *V* is driven by a half-round belt from a pulley on the same shaft as the lower feed roll. This shaft is driven through worm-gearing from the shaft on which cone pulley *U* is mounted. The cone pulley is driven from the countershaft cone *a*. The speed of reel *V* is regulated by a friction spring *b*, Fig. 2, on one end of the stud that supports the reel, the spring acting on fiber washers on each side of the reel. Adjustment of the friction is made by means of knob *c*. This arrangement permits the ready replacement of a full reel with an empty one. During this interval the stock can simply feed into the open and be spun on the new reel when it is in place. The feed can be varied by means of the cane grooved pulleys. There is a similar friction arrangement for the upper reel.

The quenching medium is supplied by gravity to pot *P* from a central tank of fair-sized capacity, equipped with stop-cocks for regulating the flow. This tank, which is not shown, is also provided with a heater and thermostat to control the temperature of the bath. An adjustable fluid level tube *d*, Fig. 1, is inserted in the drain pipe of the quenching pot in a telescopic manner to raise or lower the level of the quenching bath in relation to the exit from the fire-tube. The quenching medium drains from the pot into a filtering tank and from there back to the feed tank. The quenching pot can be readily removed for examining roll *O* or for cleaning.

If the furnace is gas-fired, any of the well-known methods of controlling the fuel mixture and the temperature can be applied and operated from a pyrometer. However, the design of the furnace is such that electricity can be used for heating without any more change than the installation of the proper electrical units. The selection of gas or electricity for heating should be determined on the basis of operating and other costs.

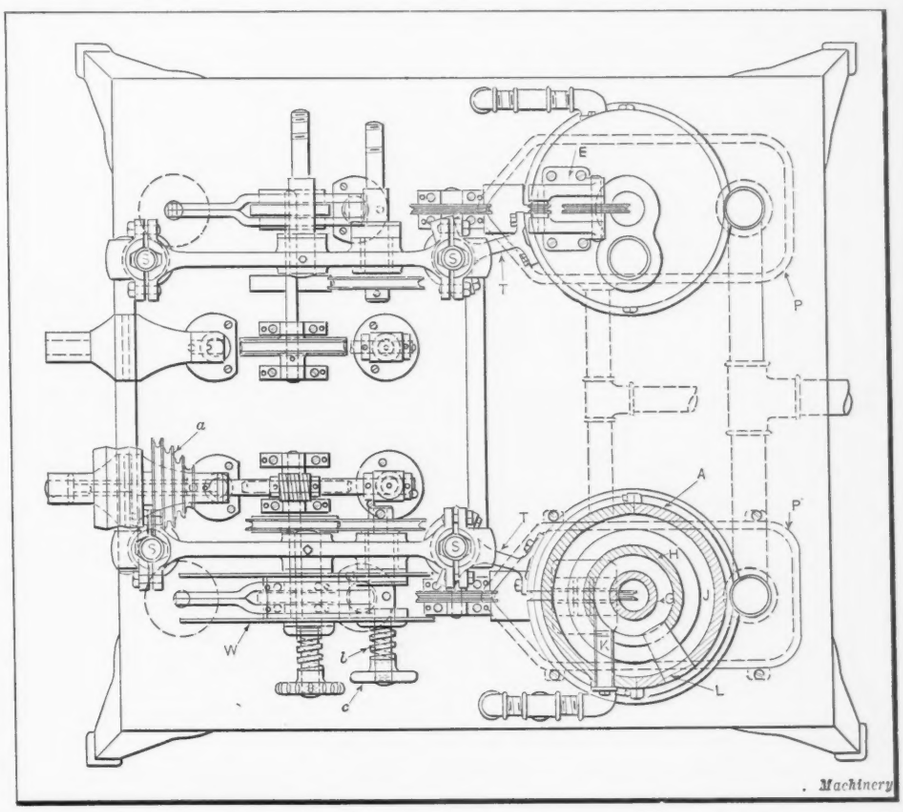

Fig. 2. Plan View of the Wire or Strip Stock Heat-treating Furnace shown in Fig. 1

Furnace for Individual Parts

The handling of individual parts calls for a different furnace design than that just described. A type used for tempering, annealing, or baking enamel on small parts is shown in Fig. 3. The design is circular so that the loading and unloading stations are brought into close proximity with each other. The heating unit *A* is mounted on cast-iron top plates *B* and *C*. There is a muffle *D* which consists of three molded segments made of crystolon. The fire space is built up of fire-brick portions *E*, and the sides and top between the fire-brick and casings *F* and *G* are filled and tamped with "Sil-O-Cel" powder.

The top plates and fire-brick directly supported by them are separated radially to provide a circular slot through which the work supports *H* extend. The top plate *C* is supported from base *U*, by pillars *J*, while plate *B* is supported by the central pillar *K*. In this space provided between the

top plates and base by the pillars, the driving mechanism is located. Spider *L* carries the work supports *H*, and is bolted to the central gear *M*, the latter being provided with a ball thrust bearing *N* to minimize the friction due to the weight of the combined pieces. The drive consists of shaft *O* and worm *P*, the latter meshing with worm-wheel *Q*. On the same shaft as the worm-wheel is pinion *R*, this unit being secured by brackets *S* and *T*.

Work supports *H* may be made from nichrome, "Fahrite," or some other heat-resisting alloy, and can be altered to suit a variety of parts. In some instances, the more delicate parts are unloaded and placed in trays with tongs, while with others a diagonal sweep can be made to slide the parts automatically off the holders into a receptacle as they

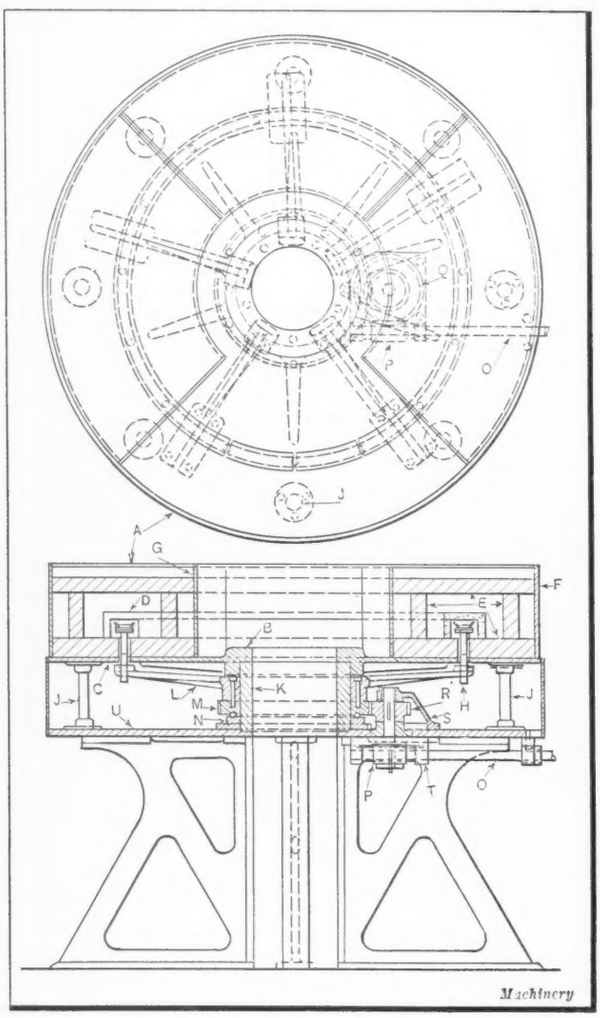

Fig. 3. Furnace of the Continuous Type for heat-treating Parts individually

emerge from the furnace. Each of the three sections of muffle *D* has its individual fuel supply, in case gas is used, or individual electric units, in the event that this type of heating is employed. If gas-fired, the central unit is lighted first, and then either side unit, which prevents any serious blow-out in case a pilot light on the units should be extinguished accidentally. With a heat control on each unit, any combination of heats, such as an ascending heat or a descending heat, can be provided for the parts passing through the furnace.

* * *

The vast enterprises operated by the Ford Motor Co. employ at the present time over 106,000 people. The main works in Detroit employ nearly 70,000 people, and about 25,000 are employed in different branches throughout the United States and Canada. Eleven thousand people are employed in foreign countries.

CUTTING A THREAD GROOVE WITH A CONSTANTLY INCREASING LEAD

By H. E. MORRISON

One of the most interesting lathe jobs that the writer has ever come across was the cutting of a thread groove having a fine pitch at one end of the work and gradually increasing in pitch as the other end of the work is approached. In order to cut a thread of this kind, it is obvious that the speed of the lead-screw must be gradually increased while the spindle speed remains constant. This was accomplished by winding about 30 feet of narrow strip brass, about 0.045 inch thick, on a pulley attached to the lead-screw, one end of the strip brass being secured to the face of the pulley, and the free end attached to a similar pulley mounted on the lathe spindle.

Now when the lathe is started the strip brass will be wound up on the pulley secured to the spindle while the strip brass is being unwound from the pulley on the lead-screw. Thus when the lathe starts, the effective diameter of the pulley on the spindle may be one-half that of the pulley on the lead-screw, but as the lathe carriage is advanced, the effective diameter of the pulley on the spindle increases while that of the pulley on the lead-screw decreases, so that the speed of the lead-screw is gradually or constantly increased.

The strip brass is rewound on the lead-screw pulley after the threading tool has taken one cut, by a simple crank or some similar device. A mixture of grease and resin is applied to the strip brass in order to maintain the same amount of friction during the winding and rewinding operations so that the carriage will be brought back to the same position at the starting point of the thread. It may be of interest to some readers to know that the thread produced in this manner was employed in a device or fixture used in stretching out coil springs after they had been flattened to form belt couplings.

* * *

MOTOR CONTROL SAFETY PRECAUTIONS

By FRANCIS M. WESTON, Jr.

As soon as a motor-driven machine is set up, it is good practice to mark the motor with a conspicuous number and paint the same number on the box containing the switch and rheostat that control the motor. This applies with particular force in cases where the rheostat is mounted on the wall of the shop at some distance from the motor. In some shops several switches and rheostats are grouped on the wall near the outlet of the conduit that supplies current to a group of motors.

The older employes in the shop know offhand which control box belongs to each machine, but unless the boxes are marked, a new man has to inquire every time he wants to start a machine or else he must experiment with the controls, which wastes time and current. It is possible, too, that serious accidents may result if the workman who is experimenting with the controls inadvertently starts a machine on which work is being set up. Even the old-timers, when handling rush work or when under excitement due to an accident, sometimes pull the wrong switch and cause a great deal of damage. A practical insurance against this risk is cheap, the cost being only that of a can of paint, a set of paper stencils, and a few minutes' time.

* * *

An interesting device has recently been placed on the market by the Ren Mfg. Co., Winchester, Mass., consisting of a simple and effective lock for preventing the theft of electric light bulbs in shops, hotels, and similar places. The device consists of a coiled spring with a grooved fiber washer, a special punch being used for attaching the lock to the socket. It can be used with any standard brass socket and any standard electric light bulb. A lamp locked by this device cannot be removed except by breaking the glass.

COOPERATION BETWEEN MACHINE SHOP AND FOUNDRY

By J. P. GLYNN

To what extent does machine shop management profit by the suggestions offered by the foundryman? The numerous foundry associations throughout the United States have, at times, published their sets of rules or "trade customs" which form a basis for their relations with the machine shop. These rules cover many subjects, such as orders, deliveries, liability of pattern insurance and storage, defectives, claims, cancellations, pattern equipment, etc. The first paragraph in "Uniform Trade Customs," as adopted by the Ohio State Foundrymen's Association, reads: "All patterns are to be kept in condition by the owner, to make castings of the quality and quantity required." It is a well-known fact that in all foundries there are numerous patterns which are in no fit condition to be worked in the sand. Yet the customer often expects the foundryman to turn out good castings from these patterns, of proper dimensions and at a minimum cost.

When a pattern is in such condition that it becomes necessary for the molder to do patching in the mold, there is considerable danger of losing the castings; and, if after being cast, they can be used, they usually show roughness and "swells" on the surfaces, and are not uniform in size and weight. The cost of the excess weight in metal is paid for by the buyer, and if added to the cost of the extra machining time, would in many cases pay for the repairing of the pattern. Many casting buyers neglect this important item, and such castings continue to go through their shop unnoticed.

Another suggestion is that all pattern equipment be painted in three colors, instead of two as formerly—red representing the cored parts; yellow, the surfaces that are to be machined; and black, the rough casting section. This plan, properly carried through, would undoubtedly prove of great value both to the machine shop and the foundry. The practical molder, when starting a job, usually endeavors to figure out for himself, if not otherwise instructed, which are to be the finished parts of the casting that he is to make. The yellow color on the pattern will automatically inform him of the finished sections, and he can make his mold so as to eliminate any dirt, shrinks, blow-holes, etc., from reaching these parts.

The older custom of using two color patterns, namely red and black, still prevails with most patternmakers, and it can be safely stated that not 5 per cent of the patterns in the foundries at present are of the three-color type. If the owner of the patterns could appreciate the foundryman's views in this matter, there is no question but that he would be willing to cooperate fully.

Another trade custom, and one that is often disregarded, is that of requesting that castings be machined on the cope side first, in order to cut down the cost of working on castings that later prove to be defective. As an example, a planer was loaded with ten motor plates that were to be machined on both sides. After cutting for some time, it was noted that one of them was showing numerous blow-holes just under the skin of the casting. When finished on one side, they were turned over and machining was started on the reverse side. At the completion of the machining it was found that three more showed the same defects as the first one. The operator had in this case placed them on the planer table, not noticing which was the cope or drag side. Had he placed them all with the cope side up, the four defective castings would have been discovered at once. In this case, it was found that the molder had neglected to vent the cope properly on some of his molds. It is not always practicable to machine the cope side first, but where it can be done, it is good practice, and much of the machining time on scrap can be eliminated. If the men in the machine shop are not familiar with foundry methods, the castings could be so marked that it would be an easy matter to tell which are the cope sides of the castings.

Another foundry trade custom is to ask for consultation in pattern rigging. Often too much is left to the patternmaker, and he builds the pattern without consulting the foundryman relative to the most efficient method of molding. With the modern methods now in use in the foundry, there is little excuse for having castings that come to the buyer lacking in uniformity of size and weight. If the pattern equipment is properly built, much of this trouble can be avoided.

Foundry trade customs call for all pattern equipment to be legibly numbered and every loose piece to be so marked that any chance of its being set up wrong is eliminated. Failure to mark all parts properly often causes costly errors, such as that of losing pieces of the equipment or making the castings wrong. Unless the owner of the patterns sees to it that this system is carried out to the letter by his patternmaker, the foundry will invariably have trouble in keeping track of such parts, although it may have a very rigid system of storage.

* * *

CHECKING THE CONCENTRICITY OF LARGE BALL RACES

When a part is to be manufactured within close limits of accuracy, the tendency frequently is to design elaborate methods of machining and checking instead of employing

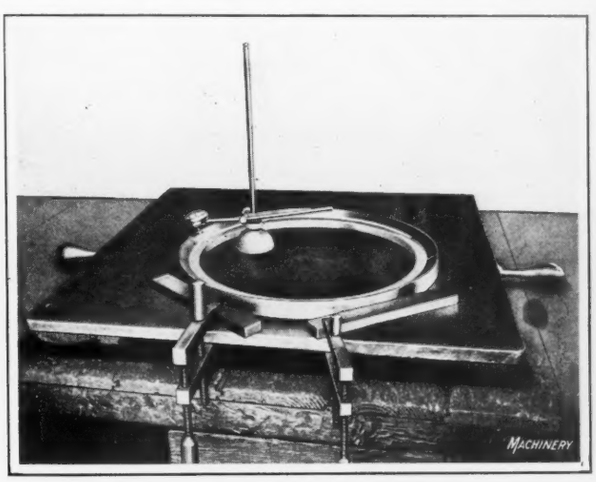

Simple but Accurate Method of determining the Concentricity of Large Ball Races

a simpler method which would be less expensive and equally satisfactory. In the accompanying illustration, is shown a simple device employed by the American Tool Works Co., Cincinnati, Ohio, for checking the concentricity of the angular surfaces of large ball races with the periphery. These races take the thrust of the column in radial drilling machines. The angular surfaces must be concentric all around within plus or minus 0.0005 inch.

Two hardened and ground bars are clamped V fashion to a surface plate, and the outside of the ring rests against these blocks. After the indicator is brought in contact with a surface as shown, the ball race is simply revolved against the clamped bars. The race illustrated is about 16 inches in diameter. The mating section of this race has two angular surfaces, and both of these races are checked in the same manner and are required to be within the same limits of accuracy.

* * *

Ten electric power companies, with a combined capital of over $300,000,000 and operating forty power stations capable of producing a total of more than two million horsepower, have combined to form what is known as a "superpower" electric unit. By the terms of the agreement, the whole system serving 8,000,000 people can be operated as a single unit, if needed. The companies referred to are located in western Pennsylvania and Ohio.

Belting Materials

Physical Properties and General Characteristics of Leather, Rubber, Cotton, and Steel Belting

By GUSTAVE A. FRENKEL

LEATHER belting provides a highly efficient means for the general transmission of power. It can be maintained at high efficiency and is both economical and reliable in operation, provided belting of the best grade is properly installed. With the exception of specialists in the belting industry, few people realize what a tremendous difference may be produced in leather belting by varying the materials used for tanning the hide or by varying the way these materials are used. For instance, that leather may be made solid and firm or soft and pliable is generally understood, but that its power-transmitting capacity, as measured by the frictional resistance of its surface, can be varied over 25 per cent is not so well known. Since such variations are possible, it is obvious that some leathers are better than others for belting. Leather, properly tanned for use as belting must be firm, flexible, tough, elastic, durable, and must have superior gripping power.

Various brands of leather belts are on the market, and it is difficult to determine what brand will be best for a given installation. Unless the buyer of a belt has had experience, he should follow the recommendations of belting manufacturers, in order to obtain the most economical and efficient belt. Belt manufacturers have a broad knowledge of belting and belt transmission, and records of many investigations of belt problems, as well as practical experience.

Physical Properties of Leather Belting

The ultimate tensile strength of good oak-tanned leather belting varies from 3000 to 6000 pounds per square inch. The fact that leather is made from animal hide makes a variation in quality unavoidable. Being a natural product, the physical characteristics of untanned hides are beyond control. They vary with the size and breed of the cattle, no two hides being exactly alike. The structure of hide varies according to the part of the animal it is taken from, that near the backbone producing a firm, solid, elastic, but not stretchy leather, while that near the belly is soft, loose in texture, and very stretchy. Similar cuts must be used in the manufacture of belts to obtain uniform quality and strength throughout.

The stretch of a leather belt is considerably less at higher than at lower velocities, and creep does not occur at all when the belt velocity is high; however, new belts—even when the hides have been stretched before being made up into belts—have to be shortened at regular intervals, in order to maintain their power-transmitting capacity. This seems to prove that the stretch of a belt is a continuous process, apparently due to the continuous variation in stress from a minimum to a maximum and vice versa. Numerous tests made with open belt drives have shown that the stretch varies from 5 per cent to 18 per cent of the belt length. If the theory set forth in the previous articles on "Short-Center Belt Drives" (see June and July MACHINERY), which applies to belt driving in general, is adhered to, the stretch of leather belts probably would be reduced considerably.

While the foregoing holds true for open belt drives, quite different results have been attained with short-center belt drives. Investigations of these belts after they had been in operation from six to ten months, showed a stretch of only 0.95 to 1.12 per cent, most of this stretch occurring during the first months of service. Thereafter no appreciable stretch took place, and the tension roller remained in its normal position. This shows that the excessive belt stretch on an open drive is due chiefly to its uncontrollable initial tension (the tension of the belt when at rest). This tension is uncontrollable because it is affected by humidity.

On a short-center drive, the initial tension is eliminated almost entirely, and the stress in the slack strand of the belt is only a fraction of the stress in the slack strand of an open belt drive. This is a result of the high ratio of tensions 1:5 to 1:10—according to the belt velocity—as against 1:2 on an open drive. Inasmuch as the tensions in

TABLE 1. APPROXIMATE WEIGHTS OF OAK-TANNED LEATHER BELTS, POUNDS PER LINEAL FOOT

Belt Width, Inches	Class of Belt and Thickness							Belt Width, Inches	Class of Belt and Thickness				
	Light Single, 1/8 Inch	Medium Single, 3/16 Inch	Heavy Single, 1/4 Inch	Light Double, 1/4 Inch	Medium Double, 5/16 Inch	Heavy Double, 3/8 Inch	Triple, 9/16 Inch		Heavy Single, 1/4 Inch	Light Double, 1/4 Inch	Medium Double, 5/16 Inch	Heavy Double, 3/8 Inch	Triple, 9/16 Inch
0.50	0.0315	.....	.....	.....	.....	.....	....	16	2.02	2.02	2.54	3.02	4.53
0.75	0.0473	.....	.....	.....	.....	.....	....	17	2.14	2.14	2.70	3.21	4.80
1.00	0.0630	0.095	.....	.....	.....	.....	....	18	2.27	2.27	2.86	3.40	5.10
1.50	0.0940	0.143	.....	.....	.....	.....	....	19	2.39	2.39	3.02	3.59	5.38
2.00	0.1260	0.187	0.252	0.252	.....	.....	....	20	2.52	2.52	3.18	3.78	5.66
2.50	0.1570	0.236	0.315	0.315	.....	.....	....	21	2.65	2.65	3.34	3.97	5.95
3.00	0.1890	0.283	0.378	0.378	0.476	0.566	....	22	2.77	2.77	3.50	4.16	6.22
3.50	0.2200	0.330	0.441	0.441	0.556	0.661	....	23	2.90	2.90	3.65	4.34	6.51
4.00	0.2520	0.377	0.505	0.505	0.635	0.755	....	24	3.02	3.02	3.80	4.53	6.79
4.50	0.2830	.....	.....	.....	.....	.....	....	25	3.15	3.15	3.97	4.72	7.07
5.00	0.3150	0.472	0.630	0.630	0.795	0.945	....	26	3.28	3.28	4.13	4.91	7.36
5.50	0.3470	.....	.....	.....	.....	.....	....	27	3.40	3.40	4.29	5.10	7.64
6.00	0.3780	0.566	0.756	0.756	0.955	1.130	1.70	28	3.53	3.53	4.45	5.28	7.92
7.00	.....	0.661	0.882	0.882	1.110	1.320	1.98	29	3.65	3.65	4.61	5.47	8.21
8.00	.....	0.755	1.010	1.010	1.270	1.510	2.26	30	3.78	3.78	4.76	5.66	8.48
9.00	.....	0.850	1.130	1.130	1.430	1.700	2.55	31	....	....	....	....	8.76
10.00	.....	0.945	1.260	1.260	1.590	1.890	2.83	32	....	....	....	....	9.05
11.00	.....	1.040	1.380	1.380	1.750	2.080	3.12	33	....	....	....	....	9.35
12.00	.....	1.130	1.510	1.510	1.910	2.270	3.40	34	....	....	....	....	9.62
13.00	.....	1.220	1.640	1.640	2.060	2.460	3.68	35	....	....	....	....	9.90
14.00	.....	1.320	1.760	1.760	2.220	2.640	3.96	36	....	....	....	....	10.20
15.00	.....	.....	1.890	1.890	2.380	2.830	4.25	37	....	....	....	....	10.45

Machinery

the slack and tight strands of a belt are equal when at rest, it is reasonable to assume that the tension in the belt of a short-center drive at rest amounts to almost nothing; furthermore, the humidity has no influence on the stress of the belt, due to the tension roller. These facts account for the comparatively small stretch.

As a general rule, single leather belts over 14 inches wide should not be used, and double leather belts not over 30 inches wide. Practice has shown that these widths cannot be exceeded without impairing the smooth running of a drive. The weight of oak-tanned leather belting varies from 12 to 18 ounces per square foot for single belts and from 22 to 33 ounces per square foot for double belts, according to the brand and thickness. The approximate weights, in pounds, per lineal foot are given in Table 1.

TABLE 2. EFFECTIVE PULL OF STEEL BELTS—VELOCITY 6000 FEET PER MINUTE

Belt Width, Inches	Pulley Diameter, Inches	Effective Pull, Pounds	Belt Width, Inches	Pulley Diameter, Inches	Effective Pull, Pounds
½	6	42	1¾	30	396
⅞	7	77	2¾	30	616
1¼	8	112	4	30	880
1⅝	10	147	4¾	30	1056
2½	12	273	4	36	1056
1⅝	18	220	4¾	36	1268
2½	18	328	4¾	42	1480
3⅛	18	423	5⅞	42	1850
1¾	24	317	4¾	48	1690
2⅜	24	423	5⅞	48	2115
3⅛	24	563	5⅞	53	2375
4	24	704	...	..	....

Machinery

Care of Belts and Pulleys

The practice of using belt dressing, belt filler, etc., for the purpose of increasing the gripping power of a belt, is not recommended. Belt dressing and filler combine with dust and dirt to form a crust over the entire belt; moreover, the pulley surface is soon covered irregularly with flat cakes, composed of this sticky mixture. Thus the intimate contact between pulley face and belt is seriously impaired and the frictional resistance considerably reduced.

The proper method, which is strongly recommended to every belt user, consists in saturating the belt with animal grease or fish oil once every month, removing any surplus carefully. Before the grease or oil is applied, the belt should be thoroughly cleaned. The pulley faces also should be cleaned and polished. It is not the rough surface that increases the frictional resistance, but the intimate contact between belt and pulley, and this contact can be attained only by having a smooth pulley face and a clean pliable belt. If every belt user would treat his belts in this manner, he certainly would be satisfied with the result.

Oak-tanned Leather

The oak-tanning method is generally considered the best for leather belting. The best quality of oak-tanned leather is attained by a long-continued tanning process which transforms a hide into the finest and strongest leather, tanned to its inmost fibers. When the hides arrive at the tanneries, the first process is to soak them thoroughly in water, to remove any impurities. After the cleaning process is completed, the hides are treated with lime, the object being to loosen the hair for the following hair-removing process. The hides are then washed in water and any remaining lime is neutralized in an alkali bath and removed by graining. For the tanning process, which follows the cleaning, the hides are placed flat in pits, with loose bark spread between the layers and then entirely covered with tanning liquor. Here they remain until thoroughly tanned, which takes from fifteen to twenty weeks, the layers of bark being repeatedly renewed during this time. At the end of this tanning period, the hides are taken out of the pits, thoroughly washed, the grain side oiled and then transferred to the dry room, where they are exposed to an even temperature until the proper coloration is attained.

The hides are now converted into leather, but this leather is not yet in a condition to be used for belts. It has to undergo many more processes before it reaches that pliable state which is characteristic of a good leather belt. These processes cover shaving; scouring; stuffing with grease; stretching; and finally lapping and cementing.

Belts Made from Fabrics

Among fabric belts (aside from rubber belts), the solid woven, impregnated cotton belt seems to take first place as a substitute for leather belts. Balata and stitched canvas belts, which are made up of plies similar to rubber belts, apparently have not been able to get a firm hold in the field of power transmission. A comparison of these types of belting shows that balata and stitched canvas belts possess a definite maximum of power transmission beyond which it is impossible to go, and that this maximum capacity is far below the capacity of leather belts.

The solid-woven cotton belt seems to be the only fabric belt which nearly approaches the capacity of a leather belt. The stretch of this cotton belting in service is about the same as leather, and, like all cotton belting, it is affected by moisture and high temperature, although the effect is the reverse of the effect on leather. In damp places leather stretches and cotton shrinks; the changes in length, however, due to changes in atmospheric conditions, are much less for cotton than for leather, due to the treatment which cotton belts undergo.

The L. H. Gilmer Co., Philadelphia, Pa., gives ultimate tensile strength values for solid-woven cotton belts, varying from 4480 to 5375 pounds per square inch. Although solid-woven cotton belts do not have the durability of leather belts, their flexibility is great and they can be used on the smallest pulley without much loss through bending and without subjecting the belt to greater strain. They are unaffected by grease, grit, mineral oils, or heat.

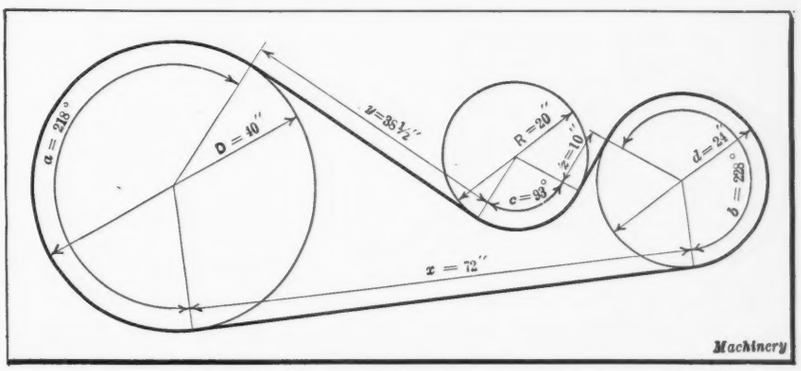

Diagram showing Factors used in determining Length of Belt for Short-center Drive

The Steel Belt

Steel belts have been used abroad for many years with success. They consist of thin, flat steel bands, varying from 0.008 to 0.035 inch in thickness and from ½ to 8 inches in width. A difficulty met with in the production of steel belts in the past was that of securing a perfectly homogeneous metal of high tensile strength, but this has been overcome, and a satisfactory steel is now manufactured. The steel belt of the Eloesser-Kraftband-Gesellschaft in Berlin-Charlottenburg, Germany, for instance, transmits 120 to 280 horsepower at 6000 feet per minute. The width of the belt is 4 inches, the thickness 0.016 inch, and the working stress 8000 to 19,000 pounds per square inch.

The pulleys for steel belts have a straight face, and the rim is covered with thin cork, which is glued to a piece of canvas cemented to the pulley rim. The pulleys must be well balanced and turned true. The velocity of steel belts varies from 6000 to 10,000 feet per minute, which necessitates a careful installation. Table 2 gives the effective pull of steel belts for certain belt widths and pulley diameters, at a velocity of 6000 feet per minute.

Rubber Belting

Though the use of rubber belting for power transmission has increased greatly during recent years, comparatively little attention has been paid to its properties. This lack of information has prompted the author to engage in extended research on rubber belts. The results of this research will be incorporated in a separate article on "Rubber Belting" to be published in October MACHINERY. This article will deal with the physical properties of rubber belts, and will contain formulas for designing rubber belt drives, together with a specific example illustrating their application.

Calculating Length of Belt

The procedure in determining the length of a belt is illustrated by the accompanying diagram, where D, d, and R represent the respective pulley diameters, in inches; a, b, c the arcs of contact, in degrees; and x, y, z the tangential distances between the pulleys, in inches. The length L of the belt in feet is:

$$L = \frac{Da + db + Rc}{1375.8} + \frac{x + y + z}{12}$$

From this length the average stretch has to be deducted in order to eliminate a shortening of the endless belt afterward. The stretch of a leather belt used with a short-center drive is from 0.95 to 1.12 per cent, as previously mentioned, most of the stretch occurring during the first months of service. Hence, an average stretch of 1 per cent of the total belt length will be assumed.

Example—Find the proper length of endless belt for the drive represented by the diagram.

By substitution of numerical values in the preceding formula, the length of belt is found to be:

$$L = \frac{40 \times 218 + 24 \times 228 + 20 \times 93}{1375.8} + \frac{72 + 38.5 + 10}{12}$$

$$= 21.7 \text{ feet}$$

Deducting 1 per cent for stretch, we have 21.7 — 0.217 = 21.483 feet or 21 feet 5¾ inches, which represents the proper length of the endless belt.

* * *

CARE IN HIRING MEN

By RUSSELL J. WALDO

At this time, when every effort must be made to reduce production costs, it is surprising how easily executives pass over the question of making their employes more efficient or of utilizing the ability that is within their own plant before seeking elsewhere for help. Large sums are spent on the most efficient machines, but the successful use of these machines depends mainly upon the men who are operating them. Generally, a good operator can operate a poor machine far better than a poor operator can operate a good machine. Yet it is surprising to note the methods used in selecting employes by many firms who spend considerable money on high-grade equipment.

The man who can learn the most about a given task in the shortest possible time is the most desirable type of employe. He will be able to shoulder greater responsibility than the man who must take a longer time to learn his work. Yet executives everywhere seem to be inclined to select men on time standards rather than on experience standards. They seem to believe that the man who has worked the longest is the one who should be selected for the most exacting tasks. But, after all, the man that is needed is the one who can learn his work rapidly and profit by his experience.

Many a man seeking employment has succeeded in "getting by" the superintendent, because the latter has no definite plan for selecting men. An employment clerk or manager must have some experience in the work for which he is hiring employes. There is no better method of eliminating the present waste than to make the employment interviewer spend some of his time in the plant, so that he may acquire the experience and background essential for success in his work. It is this knowledge of the work that will enable him to place every man in the job where he will be able to do his best.

The purpose of this article is to awaken in executives who really want to reduce their production costs a realization of the keen need for more accurate employment methods, so that the right man may be selected for the right place. The best time to find out about the inefficiency of an employe is when he enters the plant the first time. After he has been on the job, the foreman often does not like to let him go. He acquires new friends and his new friends become interested in him; this interest holds many an inefficient man in his job. The foreman naturally dislikes to let a man go after a great deal of time has been spent in breaking him in, and thinks that if a little more time is spent in training him, he may become a better workman. The results are usually the same. The man does no better after the second chance, and it is not until he has spoiled a great deal of material that the foreman realizes that he has the wrong man at work. Then it is far too late for him to correct the error.

It is for this reason that care should be taken in interviewing applicants. It is a most exacting task to select from a crowd the men who are best fitted for the work to be done. Some method must be employed that will check up the man beyond question. There are various ways of doing this, as, for instance, the trade test, direct and indirect questioning, and observation of the applicant. All have a part in increasing the shop efficiency.

When executives set out to purchase machinery, they ask for proof of the capacity of the machine they are purchasing. Yet when they set out to select an operator for that machine they ask for no proof of what the man can do. Very few men needing operators for a certain machine know what the essential qualifications for that work are. They simply look upon it as a job that can be filled by almost anyone.

While it is true that neatness counts for a great deal, it is not always the neatest man who makes the best workman. On the contrary, the neatest man often makes the poorest workman. He is afraid of getting soiled in his work. It is a common occurrence to see a man of slovenly appearance, who will never allow his machine or workbench to become cluttered. Some of the best machine operators do not shave very often and do not take pride in keeping themselves clean in their work.

Industry today is at the cross-roads, and if its leaders expect to reap the profits that rightly belong to them, they must organize for a closer examination of the men whom they hire.

* * *

AMERICAN MACHINERY IN AUSTRALIA

American exports of industrial machinery to Australia increased more than $1,500,000 in value in 1923 as compared with the preceding year. The total exports of industrial machinery in 1923 amounted to $5,500,000. Of this, metal-working machinery represented a value of $640,000. In 1922 there were over 18,000 factories of all kinds in Australia. Over one-third of the internal combustion engines imported into the country come from the United States. Mining and quarrying machinery also largely comes from the United States, the imports being double those from the United Kingdom.

The British Metal-working Industries

From MACHINERY's Special Correspondent

London, August 13

THE first half of this year was generally felt to have mitigated to some extent the depressed state of the metal-working industries, and although even in the same districts extremes of depressions and activity are still to be met with, July generally showed promise of a steady expansion. Significance is given to this promise by the fact that the vacation period is now at its height and under existing conditions would have been sufficient excuse for a general falling off in business.

The Machine Tool Industry

The machine tool industry is gradually attaining a healthier condition, and it is confidently anticipated that the machine tool exhibition to be held at Olympia next month will mark a definite step toward renewed stability of the industry. The exhibition will provide ample evidence of the progressive spirit that has animated the machine tool industry during the trying period since the last machine tool exhibition in 1920. Every maker of note has carried on the development of the class of machine or machines with which he is associated, and although the majority of the improvements that will be seen are not spectacular, they are frequently of a nature that increases considerably the efficiency of the tool in either production or accuracy, or both. At the same time there will be a few entirely new designs of considerable interest.

In the Manchester district, the increased interest noted in machine tools during last month continues. A distinct feature is the number of special machines that are being built, and these include not only machines that are modifications based on standard designs, but also machines of entirely special design. Firms that have been lamentably short of work for two or three years report that if the present improvement is maintained, they will be reasonably busy in six months' time. The shops of one or two of the larger makers have already a much more active appearance, and inquiries and orders are coming in at a steadily increasing rate. The demand for grinding machines of all types continues to be good. The home and overseas markets are sharing business in this section equally.

The machine tool plants in the Yorkshire area show much more activity, but the fluctuating nature of the business makes it difficult to plan ahead. Drilling machines are in demand, and lathe and planing machine builders in this area, although not working to capacity, are experiencing a steadier flow of work. Birmingham continues to be the bright spot for machine tool makers; the improvement is general, if not universal, among builders of all classes of machines. Firms building the higher grade of machine tools are distinctly the best off for orders.

It is not easy to correlate the degree of employment with the amount of work in hand, since many makers can still put machines together from stock components, and for this purpose only a nucleus personnel is required. A continuation of business activity, however, will rapidly bring about a general necessity of larger forces of workers. As an index to local conditions in the machine tool industry, it is noted that one well-known maker has again put his own foundry in operation, this being the first time since the depression that his casting requirements have warranted the overhead expenses of running his own foundry. The machines mostly in demand in the Birmingham area are turret lathes, drilling machines, milling machines, and power presses. Steps are being taken to improve the design of certain classes of milling machines, so that accurate production can be simplified and prices brought down to those that will successfully compete with American machines of these classes.

Overseas Trade in Machine Tools

The returns for June show that the exports of machine tools continue to improve in tonnage, although the total value has fallen off somewhat, the June figures being £110,804 for 1092 tons, as compared with £118,689 for 948 tons in May. Imports of machine tools show no tendency to increase substantially; in June they totalled only 252 tons, although the value was £42,333, or a value per ton of £168. In May the corresponding figures were 294 tons with a value of £54,830, or a value per ton of £187. The average value per ton of imports during the present year is £167, and the average value per ton of exports, £111. Lathes and drilling machines, with export values for the month of June of £36,592 and £23,116, respectively, constitute the most valuable items of export. Imports were divided among all classes of machines.

The General Engineering Field

General engineering is at present very patchy, although a measure of improvement is noticeable during the past month. Electrical engineering concerns are differently placed according to the class of work undertaken. Generating equipment still provides plenty of work, but electric motors are not in great demand. Wireless equipment is still in steady demand, and the number of firms engaged in this class of work is increasing.

There has been no material change in the position of the textile machinery industry during the past month. Some of the largest firms report having received more inquiries recently, but on the other hand, there are textile machinery firms in Lancashire who are worse off for work than at any period during the last three years. Some firms that specialize in finishing machinery, report an increasing number of orders from the Colonies.

The first four-cylinder passenger tank locomotives built in this country have just been completed by the London Midland & Scottish Railway Co., at the Horwich Works. Rolling stock builders have important contracts to complete, and the industry as a whole is considerably ahead of last year. Boilers are not in demand, but firms that specialize in fuel-saving equipment are fairly busy. The market for foundry equipment is poor, and makers of mining equipment are very short of work.

The Automobile Industry

The demand for light cars appears insatiable, and the outlook for the automobile, motorcycle, and bicycle industries is distinctly good. Some makers have been purchasing new shop equipment recently, and the branch of machine tool building that has benefited most is that specializing in gear-cutting machines. There appears to be a better demand for commercial vehicles, and an endeavor to establish a market for light motor trucks by a well-known light car manufacturer is apparently meeting with success. The trucks are being produced at a large Birmingham factory. They are already to be seen on the road in comparatively large numbers and are noticeable for their sturdy and workmanlike appearance. In general, the feeling in the whole industrial field is distinctly better, and a more hopeful attitude prevails everywhere.

Current Editorial Comment

in the Machine-building and Kindred Industries

THIRTY YEARS

In September, 1894, was published the first number of MACHINERY, which has since continued under the same ownership and management.

* * *

TOOL STEEL SPECIFICATIONS NEEDED

As no standardized specifications for tool steel, generally accepted by steel makers and users alike, are available, several corporations that are large buyers and users of tool steel have each adopted their own specifications. Most of these stress especially the chemical analysis or composition of the steel; but composition alone does not determine the merit of a steel, for it is possible to make two steels of exactly the same analysis and yet one may be very much superior to the other in cutting qualities. To use a homely analogy: Two housewives may make cakes from exactly the same ingredients, yet the cakes when baked may differ materially in quality.

Specifications for tool steel should include other requirements than composition. They must particularly include *standards of performance* of such steel, for it is not a certain amount of steel that the buyer seeks to obtain—it is the service of the steel used as a cutting tool.

Complete and uniform standard specifications for tool steel can be obtained only if the steel manufacturers themselves agree upon the details, including performance tests acceptable also to the buyers and users of tool steel. Everyone, maker and user alike, recognizes the need of such specifications; it is the "getting together" that is difficult. It is important that the steel makers take action in this connection, because if they fail to, some other organization endowed with sufficient authority will step in to do the work, and possibly do it in a way that may not be acceptable to the steel-making industry. The most satisfactory standardization work has resulted from the active efforts of the manufacturers of the products themselves; as in the automobile, gear, and boiler-making industries.

* * *

NO MACHINE CREATES POWER

One of the first principles of mechanics—that you cannot get more power out of a machine than you put into it (in fact, you cannot get quite so much)—is not so well understood in the mechanical industries as it should be. We are not now referring to inventors of perpetual motion machines, but to some men entrusted with the design and operation of machinery who actually believe they can increase the power of a machine by the employment of certain mechanisms, such as gears, levers, or toggles. Their difficulty is that they confuse the actual driving power applied to a machine with the force exerted at a given point by means of mechanical arrangements such as those mentioned. But the power is not increased; on the contrary it is necessarily decreased, because of the amount dissipated in friction losses in the mechanism.

Consider a machine tool with a single-pulley drive: The driving power for this machine is determined by the pulling power of the belt and the speed at which the driving pulley is running; but it is possible by means of reduction gearing in the headstock to increase the force exerted at the point of the cutting tool, although this increase in force can be gained only by a decrease in speed. The power, measured in foot-pounds per minute, cannot be increased; and there is as much less power at the tool point than at the driving pulley, as is required to drive the mechanism when it is running idle.

In machine design it is helpful to increase the force applied at a certain point by means of gears and other mechanisms; but no one should believe that the power of a machine is increased by this means. All that is accomplished is to exert a greater force at a slower rate—speed has been sacrificed to gain force at the point where the useful work of the machine is done, and considerable power has been sacrificed also in frictional losses in the mechanism.

Those who do not fully understand the meaning of the terms "power," "work" and "force" can find them clearly defined in any good handbook.

* * *

THE COOPERATIVE HIGH SCHOOL

The system of engineering education inaugurated by Dean Schneider at the University of Cincinnati, providing for alternate work, two weeks in shop or factory and two weeks at the university, has been applied to regular machine shop training by several high schools, a notable example being the high school in Springfield, Vermont. Under this arrangement, a boy may obtain a good high school education while acquiring practical shop training in a manufacturing plant. He is paid for his time in the shop, and is, therefore, partly self-supporting—an important inducement.

This system can be operated in any city and town in the United States where there are several fair-sized machine shops and a high school. A greatly diversified machinery industry is not necessary. There are really only four separate machine shops in Springfield, Vt., and yet the cooperative system in that town has been highly successful. It replaces the usual apprentice training, and many claim that it is superior thereto. As a new idea in mechanical education it is well worth considering, and machinery manufacturers who have plants in towns where the cooperative plan can be applied, should investigate this method and interest the public school authorities in it. The machinery industry cannot afford to neglect any practicable means to insure the adequate training of future mechanics.

* * *

CLEAN, LIGHT, ORDERLY SHOPS

It is a mistake to conclude that shop men work for wages only, and that shop conditions make no difference to them so long as they draw good wages. Many shop men, especially skilled toolmakers and machinists, are quite particular as to the kind of shop in which they work, and actually work for less in a clean, light, orderly, well-managed shop than they would in one where conditions were unsatisfactory.

It is often said that mechanics do not now have the pride of workmanship that was so common twenty-five years ago. This is undoubtedly true. But there are still many old-school mechanics who take great pride in their work, and who are encouraged to do better work when surrounded by good working conditions, and when they have the use of accurate, modern machine tools. No mechanic is encouraged to put forth his best efforts in an untidy shop, using obsolete machines that are frequently out of repair, with which accuracy is difficult to attain, and that make interruptions necessary in productive work to attend to the weaknesses of the machines.

Making Oxy-acetylene Cutting Tips

Cost-reducing Methods Used in Manufacturing Cutting Tips for Oxy-acetylene Outfits

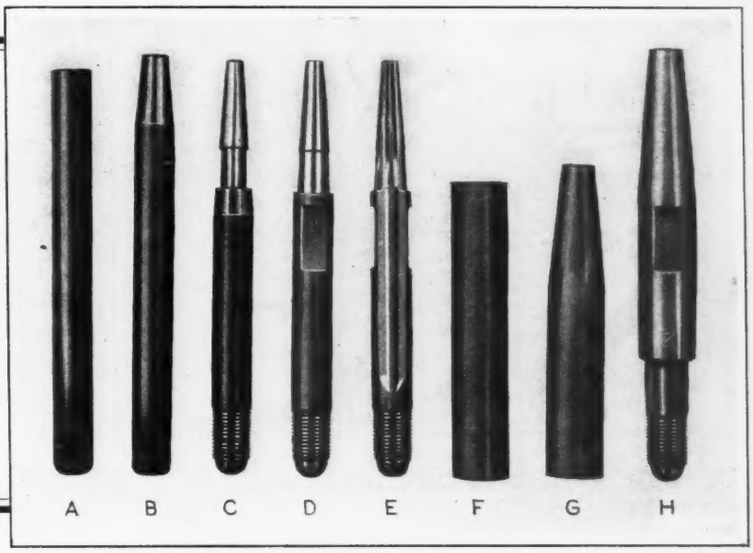

FOR manufacturing oxy-acetylene cutting tips on a quantity production basis, the Harris Calorific Co., Cleveland, Ohio, has developed methods that have resulted in substantial savings in production costs. These tips consist of two pieces of copper tubing which are put through several operations individually and then assembled as shown at *H* in the heading illustration. In this illustration the pieces are arranged according to the sequence of the operations performed on them. The internal tip is made from a piece of brass tubing, such as shown at *A*, which measures 13/32 inch outside diameter, has a 1/8-inch hole, and is cut 4 inches in length. The external shell is made of copper tubing 9/16 inch outside diameter, 13/32 inch inside diameter, and cut 2 7/8 inches long, as shown at *F*.

Swaging and Screw Machine Operations on the Internal Tip

The first operation on the tip consists of cutting it from tubing to length in a Cleveland automatic; in this operation one end is slightly rounded as shown at *A*. The next step consists of swaging the opposite end to the shape shown at *B* so as to close the hole at this end. This operation is performed in the special swaging machine illustrated in Fig. 1, the cover plate having been removed at the time the photograph was taken in order that the dies and swaging blocks could be better observed.

The operation of the dies is practically the same as in conventional designs. They are contained in a revolving chuck which is surrounded by a series of rollers in an outer housing that also revolves, due to the action of the chuck, but at a much slower speed. Extending from the dies to the outside of the chuck are blocks which come in contact with the rollers and hammer the dies back and forth on the work. At *A* on the work-slide support is shown a set of the taper dies used. A simple two-jaw chuck attached to the front end of the work-slide is employed to hold the work in the die-blocks during the swaging. This slide is moved to and from the dies by revolving the capstan handles. The entire equipment is mounted on a concrete base.

The third operation on the tip, which is performed in a hand screw machine equipped with a six-hole turret, brings the work to the form shown at *C* in the heading illustration, with the exception of threading. The first step in the operation is to advance a turret stop-bar against the work so as to locate it properly in the jaws of the collet. Then the tip end is taper-turned with a standard box-tool. At the completion of the taper-turning, a square-nose tool on the cross-slide is advanced to produce the neck immediately in back of the tapered portion. The cross-slide is fed by hand to a stop that controls the depth of cut. The next step consists of drilling a small hole a short distance into the closed tapered end for the purpose of centering a larger drill in the succeeding operation.

For this step a special tool has been designed, the center drill being held in a part which is contained in a long supporting sleeve. The sleeve has a tapered hole which slips over the overhanging end of the work when the turret is advanced, the arrangement providing a rigid support during the step and insuring that the hole will be drilled centrally

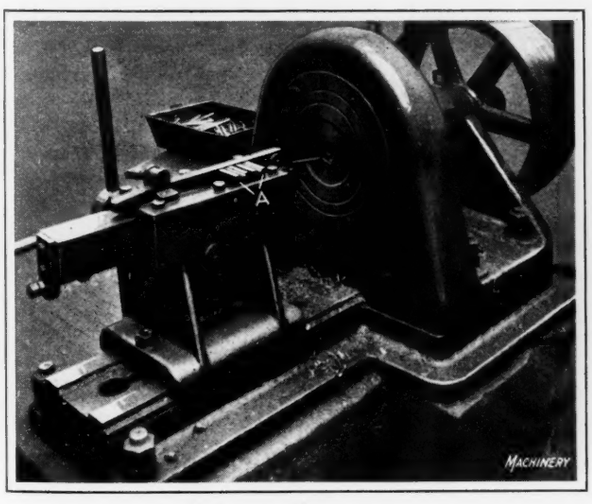

Fig. 1. One of Two Special Machines designed for swaging the Ends of the Tips and Shells

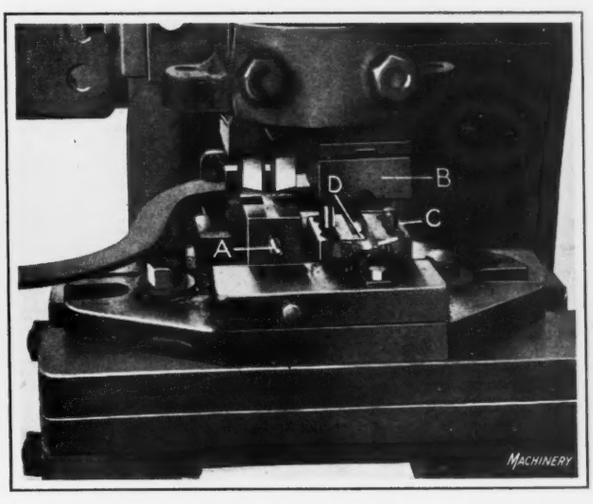

Fig. 2. Dies used in shearing Flats on the Side of the Tips and locking the Tips to the Shells

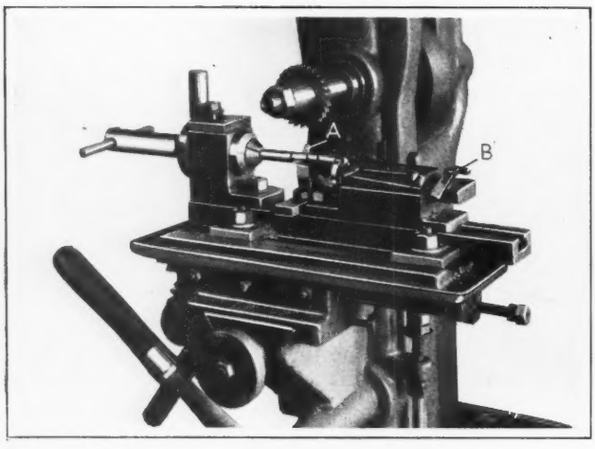

Fig. 3. Set-up of Hand Milling Machine for milling Two Long Flats diametrically opposite Each Other on the Large Diameter Portion of the Tip

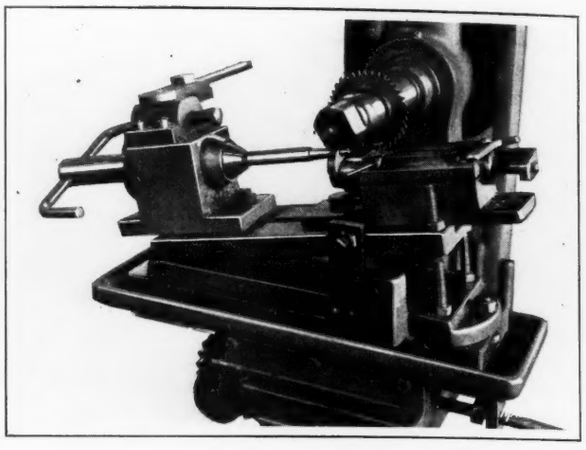

Fig. 4. Arrangement of Special Equipment on Hand Milling Machine for milling Five Equidistant Grooves around the Tapered Portion of the Tip

with the taper. In the next step, as previously mentioned, a larger hole is drilled through the tapered end into the original hole of the tubing.

The work is next reversed in the chuck and set against a stop in the spindle. Then the ball end is turned by means of a special tool. Next, after the turret has been indexed for the fifth time, the ball end is counterbored about 3/16 inch in diameter for a depth of about 7/32 inch. After coming from the hand screw machine, the ball end of the part is threaded in a machine of standard design. The tip is then completed as shown at *C*.

Power Press and Milling Machine Operations

An ingenious power press set-up has been devised for punching two flats on the tip immediately in back of the neck, as shown at *D*. For this operation, the work is slipped into a horizontal hole in an H-shaped die, as shown at *A*, Fig. 2. The metal that connects the two sides of the die is somewhat narrower than the diameter of the work and the die is cut out in this way to a certain distance below the work. The punch is so slotted that two fingers hug this connecting rib of the die when the punch descends. Thus on the downward stroke the punch shears the work on each side. The handle seen extending toward the left in the illustration is used for ejecting the work. The second die on this press is used for assembling the tip in the shell, as will be described later.

Two long flat surfaces are next milled on each side of the large diameter portion of the tip, as shown at *E* in the heading illustration, a ridge of metal being left between the flats. These ridges are approximately 90 degrees from the center of the flats sheared in the preceding operation. The set-up illustrated in Fig. 3 is used for this milling operation. It will be seen that the work is held in a special fixture on the table of the machine, and two narrow milling cutters are mounted on the arbor. The threaded end of the work is held in a collet chuck, while the tapered end centers in holes in a collar on the tailstock. A flat spring *A* is used to locate the work radially as accurately as is necessary for the operation before tightening the chuck. For the milling step, the table is raised to a stop and then fed past the cutters to a second stop. The collet can then be quickly indexed to a second position for milling the flats on the opposite side of the work. The removing and replacing of the work is facilitated by withdrawing the tailstock collar from the work by means of lever *B*.

The final operation on the internal tip is the milling of five grooves spaced equidistantly around the tapered portion as shown in the view at *E* in the heading illustration. The set-up for this operation is quite similar to the preceding one, as will be seen by referring to Fig. 4. However, in this case the work-holding fixture is tilted to suit the taper of the part, and only one cutter is mounted on the machine arbor. Also the indexing mechanism provides for holding the work in five positions. In replacing work in the collet chuck, the overhead lever on the headstock is pulled back, causing the locking bar to enter a slot in the indexing collar and thus prevent the mechanism from turning. The tapered end is again supported by a collar on the tailstock, but in this case the hole in the collar is cut through to the periphery in order to permit the cutter to reach the work.

Assembling the Two Parts

After the shell has been cut off to length on an automatic machine, it is swaged as shown at *G* in the heading illustration, to the same angle as the tip. The two parts are then ready for assembling, the tip being inserted in the shell by hand, and then pressed into it firmly under an arbor press. The assembled unit is then brought again to the press illustrated in Fig. 2 and laid in the right-hand die against a stop, with the grooves on the large diameter of the tip, which project somewhat beyond the shell, at the sides. This means that the flats on the internal tip are at the top and bottom as the part lies in the die.

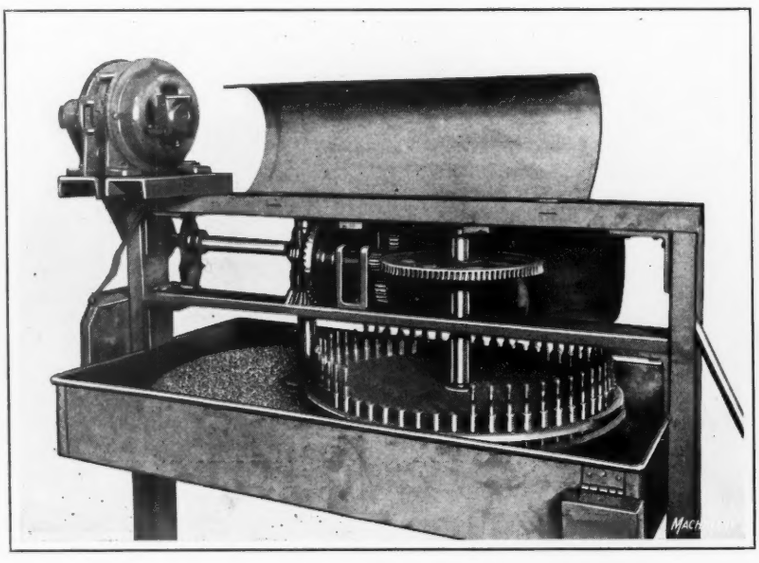

Fig. 5. Special Machine developed for the Rapid Finish-grinding of the Discharge End of the Assembled Tip

When the punch descends, blank-holders *B* and *C* grip the work firmly, and then as the descent is continued, block *C* is forced downward a certain distance relative to a square stationary block *D* in the die. With the completion of the descent, a similar square block is advanced against the work through block *B*. The action of these square pieces is to press the metal of the shell into the two flats previously sheared on the tip in such a way that the two parts are made inseparable. The next operation is performed in an ordinary engine lathe equipped with a quick-acting chuck, and consists of facing the tapered end of the shell back to the front end of the tip. When thus finished, the five grooves on the taper of the tip and the central hole form openings through which air and gas are discharged when the tip is in use. These holes are cleaned out thoroughly by using drills varying from numbers 61 to 52 on small electric drill stands.

Grinding and Polishing

An interesting machine was developed for grinding the assembled tips after the facing operation. This machine is illustrated in Fig. 5. The tips are simply inserted with the tapered end downward in vertical bushings mounted around a constantly revolving plate. When they are inserted, the tips drop on a sheet-metal track on which they slide until they reach the face of the grinding wheel. As they are carried across this wheel their own weight gives them sufficient pressure on the wheel to produce the desired finish. When they leave the wheel, they again travel on a sheet-metal track to the front side of the machine, where they are replaced. The carrier has a capacity for about sixty tips.

The main horizontal shaft of this equipment is driven by belt from an overhead ¾-horsepower motor. On this shaft there is a worm which drives a worm-wheel on the vertical grinding wheel shaft. There is also a bevel pinion on the grinding wheel shaft which delivers power through a bevel gear and spur and worm reduction gearing to the vertical shaft of the work-carrier. After coming from this machine, the tips are buffed on a floor stand, and the nozzle end is burnished by inserting it in the hole of a high-speed spindle, attached directly to the armature shaft of a motor, which is packed with wool.

* * *

EYE ACCIDENTS IN THE INDUSTRIES

The report of a two-year study of the eye hazards of industrial occupations (due to accidents, disease, and poor lighting) and of the most effective means of eliminating them, has been issued by the National Committee for the Prevention of Blindness, 130 E. 22nd St., New York City. The study was made by Lewis H. Carris, managing director of the committee, and Louis Resnick, a former member of the staff of the National Safety Council. The book, which covers more than 200 pages, deals not only with the causes of accidental and other injuries to the eyes of employes, and the means of preventing such injuries, but also with the cost of these injuries in terms of workmen's compensation, medical expense, and lowered production efficiency. The report is being distributed among industrial executives, safety engineers, plant managers, superintendents, foremen, engineering schools and colleges, and others responsible for or interested in the prevention of accidents in factories, mines, railroads, public utilities, mercantile establishments, and other places of employment. In publishing this volume, the committee calls attention to the fact that, with the single exception of fatal accidents, eye accidents surpass all other industrial hazards in seriousness, measured from the humanitarian, the cost sheet, or the production standpoint. The solution of the problem depends chiefly on legislation, education, and organized accident prevention activities.

Copies of this report are available at the following prices, which are based on the cost of production plus the distribution expense: Single copies, bound in Fabrikoid, $2.50; bound in paper, $1.50. Quantities can be obtained for distribution at a reduced rate.

MOTORS FOR MACHINE TOOLS

By J. B. ARMITAGE, Chief Mechanical Engineer, Kearney & Trecker Corporation, Milwaukee, Wis.

The writer is very much interested in the subject of the standardization of dimensions of electric motors for machine tools, and notes with pleasure that the American Engineering Standards Committee is appointing a special committee to consider this subject.

Many machine tool builders have been limited in their design of motor-driven machine tools by the wide variation in frame sizes for motors of a given horsepower but of different makes. With few exceptions, the individual motor drive, as applied to machine tools at present, is a makeshift and looks it. Many machine tool builders do not even try to camouflage the fact that the machine is designed to be belt-driven and the electric motor drive is an attachment. Designers have given much thought to this subject, and a few attempts have been made to build a real electrically driven machine with the motor and other electrical equipment built in, but such designs, when standard machines, have usually failed of accomplishing their purpose.

It is generally a simple matter to build into a new design a motor of a particular make to operate on a given voltage and speed, but while this may be satisfactory for special machines, it does not help the builder of standard machines, which must be made to be operated by any of a number of motors with different current characteristics.

At the present time it is practically impossible to choose a list of motors of a given horsepower with the same speed. If 1200 revolutions per minute is selected for the alternating-current motors, 1160 revolutions per minute would probably be the nearest listed direct-current motor. For machine tool work the fundamental requirements of motor standardization are that a motor of a given speed and horsepower shall be interchangeable with other motors of the same speed and horsepower of whatever make or current characteristics, when designed for the same kind of service. That is, the height to the center of the shaft, the shaft diameter and length, the keyway size, the size of the feet and bolts, and their location with relation to the shaft shall be identical, and the over-all diameter and total length of the motor must correspond to the standards adopted. It is understood that this would probably require the use of larger frames in some cases than would be necessary from an electrical standpoint, as direct-current motors are generally larger than alternating-current motors for a given horsepower.

In spite of the foregoing difficulties, the percentage of sales of machines equipped with individual motor drives continues to increase, and at the present time we have the peculiar situation of having both the smallest and the largest types of machines quite thoroughly motorized, but in the large class of machine tools of medium weight, the belt-driven machine still predominates. Large machines are motor-equipped partly on account of their intermittent use, but largely on account of the necessity of having crane service. Machines using low or fractional horsepower motors are motor-equipped largely due to the absence of starting equipment other than a snap-switch, and the fact that a universal motor can be used. The large class of machine tools of medium weight will only be converted from belt to individual motor drive by the standardization of the motor and its starting equipment.

The standardization of the starting equipment is almost as important as the standardization of the motor itself, for, with the present chaotic condition, it is impossible to make any provision for the proper housing of this equipment in standard machines. The writer would, therefore, suggest that the committee take up also the matter of establishing a set of dimensions for starting and controlling equipment for machine tool motors, so that cupboards or other accommodations could be made in the machine tools themselves, thus allowing a machine to be so designed that it will take any make of motor with the required starting and controlling equipment and still maintain its lines of design.

High-speed Roller Chains

By G. M. BARTLETT, Consulting Engineer, Diamond Chain & Mfg. Co., Indianapolis, Ind.

THE history of mechanical appliances and operations shows many examples of trials and rejections of devices that are afterward found to be valuable when the conditions of their use are properly understood. In not a few cases some authority will publish an opinion based upon insufficient data regarding the limitations of a certain device, which will be accepted without question by his readers, and copied and recopied in catalogues, magazines, and text-books until it has become venerable with age and the name of its author forgotten. Eventually someone presumes to question the correctness of the statement and proceeds to demonstrate its truth or falsity by the application of scientific tests. This leads to an explosion of the popular fallacy and to a new series of possibilities for a useful device long misunderstood. Such was the case with the roller transmission chain which has long enjoyed a reputation as one of the best means of transmitting power efficiently, positively, and flexibly between two parallel shafts.

Early in its history, however, someone published a statement to the effect that roller chains should not be operated

HORSEPOWER TRANSMITTED BY DIAMOND CHAINS

Single Roller				Double Roller			
Number of Chain	Pitch	Revolutions per Minute	Horsepower (Max.)	Number of Chain	Pitch	Revolutions per Minute	Horsepower (Max.)
30W	3/8	3000	2.5	D 30W	3/8	3000	5
40W	1/2	2164	4.0	D 40W	1/2	2164	8
50W	5/8	1592	6.5	D 50W	5/8	1592	13
60W	3/4	1244	9	D 60W	3/4	1244	18
80W	1	784	16	D 80W	1	784	32
100W	1 1/4	538	24	D100W	1 1/4	538	48
120W	1 1/2	434	36	D120W	1 1/2	434	72
140W	1 3/4	307	43	D140W	1 3/4	307	86
160W	2	270	59	D160W	2	270	118

Machinery

at velocities higher than 800 feet per minute. We can imagine that he might have arrived at this conclusion as a result of the following observations:

A chain of 1½ inches pitch, running over a 12-tooth sprocket at a velocity of 900 feet per minute, was noisy, the rollers tended to break, and the sprocket teeth showed too rapid wear. The same chain running over the same sprocket at a velocity of 750 feet per minute was quieter, the rollers did not break, and the sprocket teeth did not show undue wear. These facts led to the conclusion that a chain velocity of 900 feet per minute was too high for a satisfactory drive. Where is the fallacy in this conclusion which was allowed to pass without challenge for approximately thirty-five years? It was not until 1916 that one chain manufacturer published the results of a more scientific set of observations, and called attention to the fact

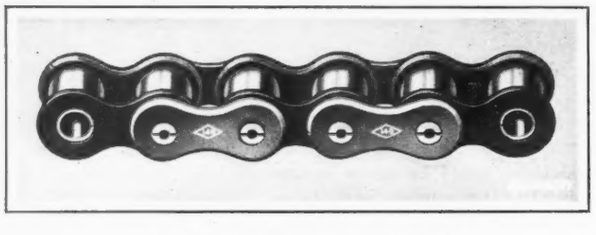

Fig. 1. Single High-speed Roller Chain

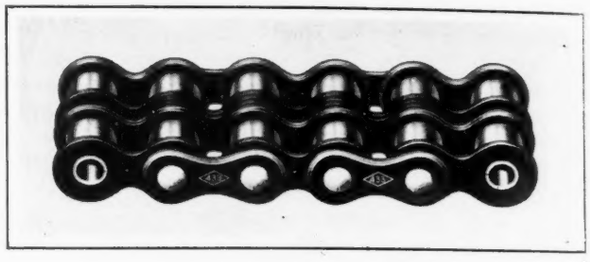

Fig. 2. Double High-speed Roller Chain

that the destructive action between chains and sprockets was not due to high chain speed (feet per minute) so much as to high sprocket speed (revolutions per minute).

In the example given, from which a fallacious conclusion might be drawn, the difference in the behavior of the two drives is not necessarily due to the difference in chain velocity. It might be due to the difference in the speed of the sprocket, which was 600 revolutions per minute in the first case, and 500 revolutions per minute in the second case. If the sprocket speed had been reduced to 400 revolutions per minute and the number of teeth increased from 12 to 20, the chain velocity would have been as high as 1000 feet per minute and its performance would have been better than in either of the other cases.

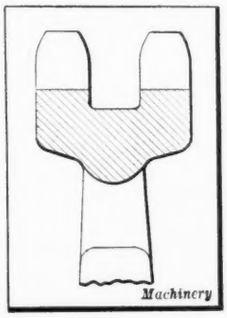

Fig. 3. Cross-section of Sprocket for Double-roller Chains

The destructive action due to impact between roller and sprocket is proportional to the weight of a chain link and to the square of the velocity with which the roller strikes the sprocket, and inversely proportional to the projected area of the roller.

The velocity of impact between roller and sprocket is proportional to the product of the pitch times the number of revolutions per minute.

The unit impact is proportional to $\frac{wP^2S^2}{A}$, where w = weight of a chain link, P = pitch, S = revolutions per minute and A = projected area of roller. Or the unit impact is proportional to $\frac{WP^2S^2}{A}$, where W is the weight per foot of chain.

Now the maximum number of revolutions per minute equals

$$\frac{C}{P}\sqrt{\frac{A}{WP}}$$

where C is a constant to be determined by tests. Experience shows that when C is equal to 2000 this formula gives the maximum sprocket speeds for satisfactory results, and that, in general, it is desirable to use sprocket speeds not greater than 80 per cent of those figures. Using 1600 as the value of C, we have the permissible sprocket speeds given in the accompanying table for standard roller chains of the heavy series.

When one keeps within the proper range with respect to the number of revolutions per minute, there is no known limit to the permissible chain velocities except where centrifugal force becomes great enough to stress the chain

beyond its proper working load. By using a sufficiently large number of teeth on the sprockets, roller chains have been driven at velocities as high as 4000 feet per minute, transmitting five times their ordinary rated horsepower at that speed. Such drives, of course, require special attention and it would not be good practice to rate chains for loads much higher than those shown in the third column of the table.

An examination of the table shows that for speeds between 785 and 1244 revolutions per minute, not more than 9 horsepower would ordinarily be recommended for ¾-inch pitch single-roller chains like the one shown in Fig. 1; and with a 10 or 15 horsepower motor running at 850 or 1140 revolutions per minute, it would be necessary to use another type of transmission chain, such as the double-roller chain illustrated in Fig. 2.

High-speed roller chains are essentially double-roller chains. The weight, pin bearing area, and width of these chains is double that of a single-roller chain of the same pitch, and they are capable of transmitting twice the power at the same speed. The sprocket teeth are cut with the same cutters as are used for single chains of the same pitch and roller diameter, but a cross-section of the sprocket tooth is as shown in Fig. 3.

The rated speeds and loads for double-roller chains are also given in the table. The very satisfactory performance of these chains, coupled with their low cost, has greatly extended the field of usefulness of the roller chain, and except where extreme quietness of action is required, they will fill all ordinary requirements for either low or high speeds.

* * *

TAILSTOCK TURRET FOR LATHE

By HENRY SIMON

The tailstock turret described in the following will prove of great value in producing a limited number of small duplicate parts. It will also be found useful in a general way. Once made, it can often be used in the tailstock in place of the ordinary drill chuck, with which it is identical except that it can be fitted with four tools instead of one. The turret consists of a stationary body *A* mounted eccentrically on a standard taper shank of the desired size, and a tool-holder or turret proper *B* which revolves concentrically on *A*. A short hub on the face of body *A* fits snugly in a corresponding counterbore in *B*, while a stud *C* holds the two parts securely together.

The tool-holder *B* is formed with four reamed holes passing entirely through its length which register exactly with the axis of the taper shank when indexed and held in position by the lock-pin *D*. This pin is slidable in the body *A* and registers with four tapered holes in *A*. The wide knurled head of the lock-pin enables it to be easily pushed into place or withdrawn by hand, or when a very rigid engagement is desired, to be set or knocked out by a light tap with a hammer. The stud *C* can be threaded, though in the illustration it is shown plain. In either case it must be held by a clamp-screw and pin *E*. The shank of stud *C* should fit loosely in the hole in part *A*, as the fit of parts *A* and *B* is entirely independent of the fit of the stud, which merely serves to keep the parts in contact. A washer should be placed under the head of the stud, and it will be found advantageous, in most cases, to supplement this by a spring-washer, to maintain a constant tension of the tool-holder against the base.

In order to hold the tools in place, each of the four holes in the turret is provided with a clamp-screw. The tools themselves are held in bushings made from lengths of stock corresponding to the size of the turret hole used. The manner of holding the tools in these bushings can be varied. For large, long drills and reamers, it may be necessary to have a bushing for each size, but in most cases the bushings can be made with a different sized hole in each end, thereby cutting the necessary number of bushings in half.

Some of the bushings are made with one or more holes large enough to let the clamp-screw pass through and take hold on the shank of the tool itself, this being usually advisable in the case of the larger tools. Others carry a clamp-screw of their own at one or both ends, and are, in turn, clamped in the turret. This arrangement is particularly desirable for the smaller sizes of drills, because it permits a wide range of adjustment of the drill forward or back. At least one bushing should be fitted to take a small drill chuck, and one should also be provided to carry a center drill. It will be found of advantage to make the bushings in two lengths, one kind practically the length of the tool-holder, the other about one-third to one-half longer, the latter, of course, being the ones to use with the smaller tools.

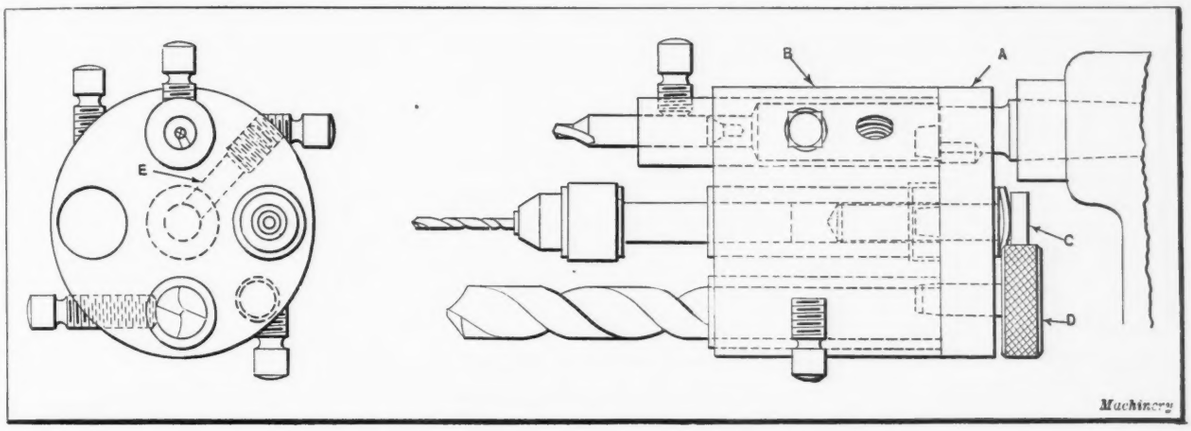

Tailstock Turret for Use on Engine or Bench Lathe

The advantages of a turret of this kind are so numerous that it will pay for its construction in a short time. Owing to its size and shape, it can be used instead of the regular drill chuck in a great many cases. Equipped with a centering drill and a small drill chuck, it will save a great many movements in machining work that does not call for large tools. It is in the production of duplicate parts, however, especially those having several internal diameters, that its greatest usefulness is attained. A turret lathe cannot always be set up for such jobs—if, indeed, a turret lathe is on hand—while the setting up of the tailstock turret does not in any way tie up the lathe, since it can instantly be removed and replaced by the drill chuck. In such a case, it can be preserved with the entire set-up intact, ready to continue the making of the same part when required. Again, the use of the turret in no way interferes with the use of the cross-slide, while, on the other hand, it can be applied to work up to two-thirds its own diameter, with a tool held in each of the four holes.

What Our Readers Think

on Subjects of General Interest in the Mechanical Field

DON'T UNDERESTIMATE THE INVENTOR

The mind of the inventor and the mind of the business man naturally work along different channels of thought. Business leaders often fail to appreciate the value of the inventor, because of the real or fancied difficulties they have had in dealing with him; but after all, is not the present state of engineering deeply indebted to the inventor? Without him, few of the wonderful advances in mechanical, electrical, and chemical engineering, upon which our present civilization is so largely based, would have been possible. Often the inventor receives but small financial returns for his contributions to the comforts of modern life, created through the activity of his mind. Therefore, he may at least claim due recognition for his contributions to the industrial advance of the past century, because these are due as much to the efforts of the inventive mind as to the broad and aggressive methods of modern business men.

The inventor who really contributes something to the advance of the industrial world—there are, of course, a great many would-be inventors who do not—is a man of persistent effort, who, having once conceived his problem, gives all his time and effort to its solution, sometimes devoting a lifetime to the discovery of a principle that afterward proves to be of the greatest importance. For years he will cling to an idea that appears to be hopeless, and seldom does financial reward come to him in a measure commensurate with the efforts that he has put forth. He does not often possess, in addition to his highly developed mechanical mind, the qualities that make for success in introducing his invention in a commercial way; although there are, of course, some noted exceptions to this rule. Everybody knows of the leading example in that respect in the automobile field, and the machine tool building field has also many examples of men of inventive capacity who have proved their ability to put their inventions to practical use in such a way that they themselves have been able to reap their just reward.

B. J.

FREE ENGINEERING SERVICE

Articles have been published from time to time pointing out the small financial return of the mechanical engineer. It has been said that as doctors and other professional men demand remuneration for their slightest service, engineers should do likewise. This subject is daily becoming of more importance, due to the prolonged depression in engineering, and it has almost reached the point where one hesitates to advise the younger generation to enter this field.

There are many reasons for the poor dividends paid on a mechanical engineering education, one of which can be traced to the custom of giving free engineering service to the buyer. Large manufacturers are constantly besieged with requests for free advice. Costly estimates are asked for, and in many cases after this information is obtained, the buyer turns to a competitor.

Let us take the customer's viewpoint; suppose a machine manufacturer needs a special ball bearing. He expects the firm with whom the order is placed to give him advice as to the proper bearing for his purpose. If the ball bearing maker simply exhibited his wares for sale and demanded that the buyer exercise his own judgment, what would be the result? Dissatisfaction would surely arise from bearing failures, owing to faulty judgment in their selection. The customer has learned that it is cheaper in the end to shift the responsibility of making engineering decisions from his own shoulders to those of the manufacturer. If the latter cannot supply him with the necessary free service, the order will be placed with a competitor.

How about the manufacturer? Free engineering advice means, when boiled down to facts, that an expensive department of experts is maintained on his payroll to answer inquiries or to provide estimates for possible orders. These inquiries occasionally help the manufacturer in finding new applications for his product, and in such cases, the department pays direct dividends. Free advice is also considered good advertising, but there is no other profession in which a vendor could give as much for nothing without its having too serious an effect on the pocketbook.

Comparing the mechanical engineering profession with that of medicine and law shows clearly the difference in the methods of paying for services rendered. Doctors and lawyers are consulted many times without actual treatment or work being undertaken. Should advice be given free with the hope that later on serious illness or legal trouble will bring the customer back for remunerative service? That would hardly be possible.

The writer feels that engineering work is underpaid, and draws the conclusion that one of the reasons for this state of affairs is the giving of too much free service. Large salaries cannot be paid when a high overhead is needed to care for the engineering inquiries and job estimates. A certain amount of free advice is due each customer, but it remains for some plan to be evolved whereby a fair charge can be made for engineering service, so that the compensation paid mechanical engineers will be more nearly equal that paid in the fields of medicine and law.

RHODES POLLEYS

ANOTHER COMMENT ON THE SERVICE PROBLEM

The following incident relating to free engineering service rendered by a machine tool builder came to my attention a few days ago. With most machine tool builders it is very difficult to decide how much engineering service it is good business to render in advance of a sale.

In this case a firm sent out an inquiry for machine equipment, the total cost of which was about $7500. With the inquiry, however, so many requests for information were included that it cost the manufacturer about $500 to make a quotation. It was necessary to make complete time studies, and other engineering work of a similar nature had to be performed. In the end, no order resulted.

Here is a case where a machine tool builder trying to obtain an order had to spend 7 per cent of the total of the order for preliminary engineering service. Possibly five or six other manufacturers of similar equipment were asked to do, and did, the same thing. Considering the industry as a whole, even if a sale was made by one of the manufacturers, there was a loss on that sale amounting to several thousand dollars; and yet, in this very case, the prospective buyer expressed as his opinion that machine tools were selling pretty high.

Ernest F. DuBrul, of the National Machine Tool Builders' Association, is quoted as saying, "We believe in proper service to customers, but we do not believe in wasteful service." That seems to be the right idea, and furthermore, why should not customers be expected to pay for actual engineering service that is rendered in addition to the selling of equipment?

OBSERVER

Notes and Comment on Engineering Topics

The Soviet Government of Russia is at the present time constructing a power station of about 75,000 kilowatts capacity near Leningrad (Petrograd), the power being intended for the use of that city. The machinery used is bought almost exclusively from three turbine and electrical machinery builders in Sweden.

A committee of the Société des Ingénieurs Civils de France has decided against the use of the two letters C. V. (cheval-vapeur) to represent horsepower, and has recommended the abbreviations "ch." for horsepower and "ch.-h." for "cheval-heure," horsepower hour. The latter abbreviations are those which are now to be used throughout France.

According to a statement made by R. E. Simpson, an engineer with the Travelers' Insurance Co., in a report to the Eyesight Conservation Council of America, fully 66 per cent of American industrial workers have defective vision, and faulty lighting and poor eyesight are today the major factors in one-eighth of the industrial accidents.

Steel wool is made by shaving thin layers of steel from high-manganese Bessemer wire. The wire is pulled, by special machinery built for the purpose, under cutting tools so arranged that they shave off chips much in the same way as a hand plane would shave off chips from a wooden pole. In later types of machines the wool is also produced by drawing the wire through circular cutting dies which shave off chips from the outside.

An interesting method of prospecting for minerals has been developed in Sweden. Two new iron and copper ore fields, in which the deposits were totally covered with glacial drift, have been discovered by prospecting with an electrical apparatus developed by two Swedish engineers. It is claimed that since 1918 the method has been successfully employed by a Swedish company in sixty different districts in Sweden, Norway, Finland, and Spain.

What is believed to be the largest oxy-acetylene welding job ever undertaken has just been completed in connection with a 16-inch steel pipe line for carrying high-pressure natural gas from Shreveport, La., to Beaumont, Tex. This pipe line is one continuous tube of steel, 210 miles long. More than 100 skilled pipe welders were employed on the work, which was carried out by the Magnolia Gas Co., with engineering advice and assistance from the Linde Air Products Co.

The Gage Steel Committee of the Bureau of Standards, of which H. W. Bearce is secretary, has published its Tenth Progress Report on gage steel investigations, containing a review of a number of wear tests that have been made on gage steels. The report also covers the aging of gage steels at ordinary temperatures, and accelerated aging. Copies of the report may be obtained by those interested from the secretary of the committee, Bureau of Standards, Washington, D. C.

Rubber flooring is likely to become more and more general with further developments in the treatment of rubber for this purpose. Reinforced rubber flooring has many advantages, and can now be produced in a variety of colors. Its only drawback would be that its first cost is somewhat higher than that of other types of flooring, but, on the other hand, its permanency is much greater, and it is believed that in most cases reinforced rubber flooring will last as long as the rest of the building.

The engineer holds a peculiar position among professional men. He deals with concrete facts and laws, and obtains results only by logically following a specific line of procedure. All his work is based upon the action of natural laws, and as a result of this, if he makes mistakes, they always come to light. Hence, specific knowledge is of greater importance to the engineer than to any other profession, because he cannot be even moderately successful without sufficient knowledge to avoid any serious mistakes.

The Division of Simplified Practice of the Department of Commerce, because of requests from piston-ring manufacturers, is acting in cooperation with the automotive industry with a view to reducing the number of sizes and types of piston-rings for automobile engines. At present one manufacturer stocks over 8000 different sizes and types of piston-rings. Others stock anywhere from 3000 to 5000 varieties. This is another case where there is urgent need for putting into practice the principle of standardization that is so generally advocated throughout all industries.

An item in a recent number of *Engineering* states that the life of a chilled roll used in rolling mills depends to a great extent upon the skill of the operator, the heat, and the quality and thickness of the steel being rolled. In exceptional instances, a pair of chilled rolls have rolled over 80,000 tons of steel plate before being scrapped. The life of sheet rolls is shorter, because the sheets cannot be rolled with water running on the rolls, as is the case with plate rolling. The methods of making rolls for rails have been much improved in recent years, and it is now not uncommon to produce 2000 tons of rails in one finishing groove without dressing, whereas only a few years ago 250 tons was considered satisfactory.

The largest electrically propelled sea-going passenger liner is to be built at the Cramp Shipbuilding yards in Camden, N. J., for the American-Hawaiian Steamship Co. The vessel will have an over-all length of 578 feet, a width of 75 feet, and a displacement of 17,500 tons. The cost will be about $5,000,000. Turbine-electric drive was selected by the owners in preference to a geared turbine or direct Diesel engine type of propulsion. The turbine-electric equipment will be built by the General Electric Co., and will consist of two Curtis turbines with a total of 20,000 horsepower, direct-connected to two alternating-current generators of 7700 kilowatt each. The generators, in turn, will supply the driving current for two 10,000 horsepower synchronous motors direct-connected to the propeller shafts. The ship is designed for an average speed of 21 knots. The first application of electric drive to ships was made by the General Electric Co. in 1907, when this type of drive was applied to the fire boats of the city of Chicago. Since that time electric drive has been applied to every class of ship with the exception of large passenger liners, the present ship being the first of this type.

Work of the Bench Lathe

Examples of Grinding, Lapping, Thread Cutting, Milling, Cutter Relieving, and Screw Slotting—Concluding Article

By FRANKLIN D. JONES

As most bench lathe work is in the precision class, grinding and lapping is often done to obtain the final accuracy and finish required. The form of attachment usually employed for external grinding consists of a spindle-bearing bracket which is mounted on the compound slide-rest, the latter providing convenient adjustment for either cylindrical or angular grinding. The spindle is rotated independently by a round belt connecting with the countershaft.

An example of angular grinding on a Stark bench lathe is shown in Fig. 11, the operation being that of grinding a beveled surface on the base of a compound slide-rest. Thus the bench lathe is used in bench lathe manufacture. The casting is first turned and faced, and then the tool-holder of the bench lathe is replaced by a grinding attachment. The upper slide serves to traverse the beveled edged wheel at the proper angle, while the cross-slide is used to feed the wheel inward for successive cuts. The work is held by its dovetailed slide, which engages a fixture secured to the face-plate. Grinding attachments of this general type are frequently used for cylindrical grinding merely by setting the compound slide parallel with the lathe spindle axis.

Traverse-spindle Grinder and Use of the Diamond Lap

The traverse-spindle grinding attachment (see Fig. 12) is so named because the spindle *A* is free to slide in its bearings, and is traversed either by means of a knob at the rear end, as shown in the illustration, or by placing the belt pulley between the thumb and forefinger. Such attachments are generally used for grinding or lapping holes, but they are also very satisfactory for external grinding, particularly on short end surfaces and whenever a light sensitive control is essential. Many light drilling, reaming, and milling operations are also done with the traverse grinder.

Fig. 12 shows an Ames machine arranged for finishing a hole by using a rotary diamond lap *B*. Laps of this kind are made of mild steel, and the slightly enlarged working end is charged with diamond dust, thus converting it into an efficient grinding wheel for small holes. Such a lap may be charged by rolling it between hardened steel plates, after placing a little diamond dust and oil on the lower plate. The spindle is revolved by a round belt connecting with the grinding pulley on the countershaft. The spindle speeds for small grinding and lapping operations usually vary from 10,000 to 12,000 revolutions per minute. If the latter speed is given as 200 revolutions per second, this may convey a better idea of the high speed employed. When abrasive wheels are to be used either for comparatively large holes or for external grinding, the speed may be reduced to possibly 8000 or 6000 revolutions per minute.

In using the diamond lap, it is important to bring it into contact with the work lightly, because too much pressure injures the cutting qualities of the lap by "stripping" it of the diamond dust. As a diamond lap does not produce sparks like an abrasive wheel, the degree of contact must be judged either by feeling or by sound. In order to intensify the slight sound resulting from contact between the lap and work, a screwdriver or similar device is held against the attachment frame with the handle end against one ear; then, even slight contact between the lap and work is audible.

To test the alignment of the traverse spindle with the hole in the work, the revolving lap is first passed through the hole while in contact with the front side until an even contact is obtained throughout the length of the hole. The workman judges the evenness of contact either by feeling or by the more sensitive sound test just referred to. Next the lap is traversed through the hole while in contact with the rear side. If the sound diminishes, this shows that the hole is small in front and increases in size toward the rear. If the sound from the lap is in the reverse order, the hole is large in front, and if the sounds are even along both front and rear sides, the attachment is in position for grinding a cylindrical surface. This is a sensitive and accurate test if made by a careful, experienced workman. A diamond lap should not be used on unhardened work, because the lap will charge the soft surface. The traverse grinder is

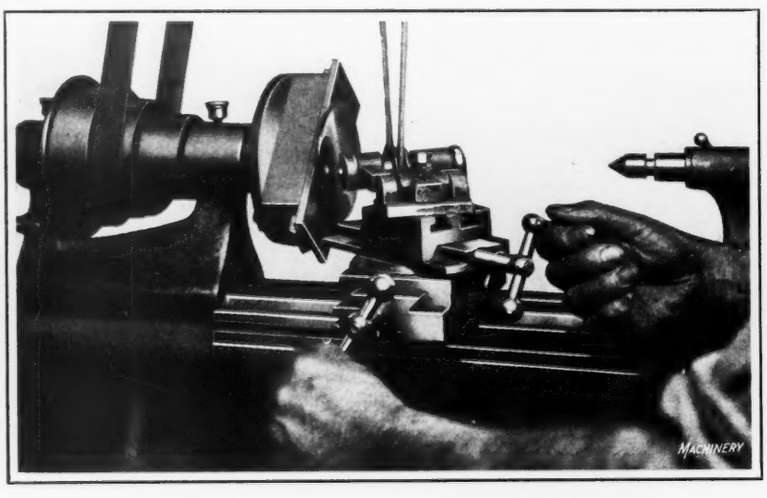

Fig. 11. Grinding Angular Surface by using External Grinding Attachment

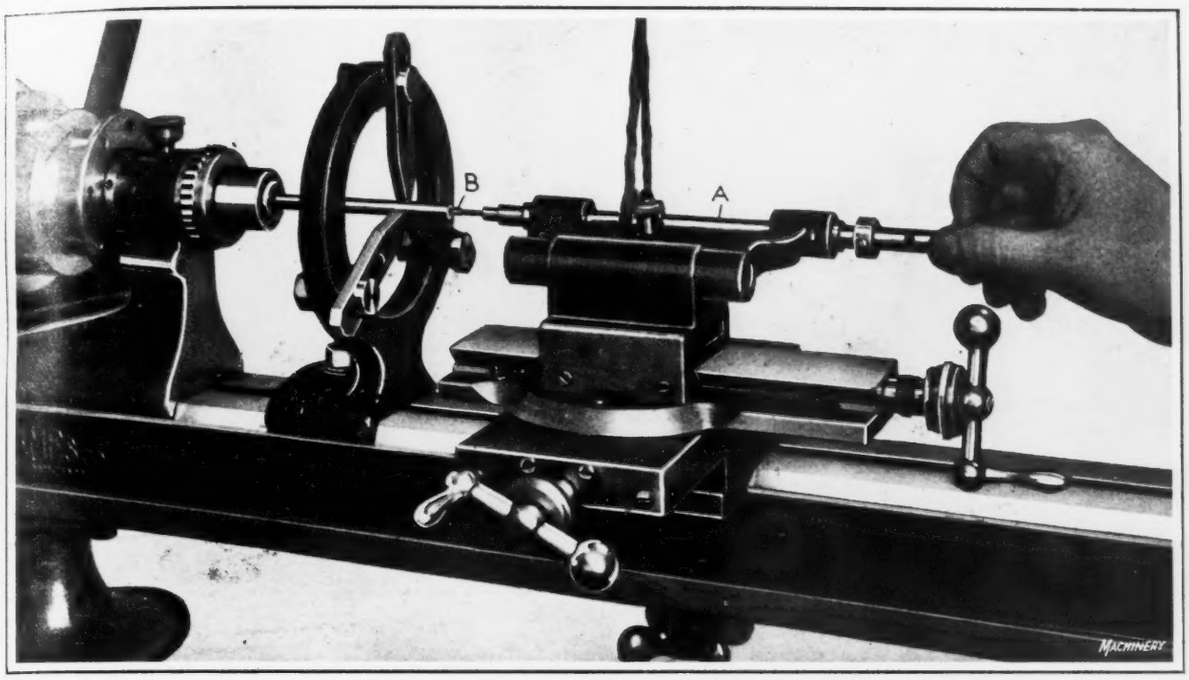

Fig. 12. Traverse-spindle Grinder equipped with a Diamond Lap for finishing a Small Hole

mounted on the tool-block in place of the regular toolpost, and the yoke carrying the spindle is pivoted so that both yoke and spindle (after withdrawing a pin) may be swung clear of the work for gaging or cleaning, without moving the cross-slide.

Examples of Form-turning and Grinding

If it is necessary to machine parts having special or irregular curves in the lathe, the templet method is commonly employed, particularly when duplicate parts must be finished to the same contour or curvature. Fig. 13 illustrates a bench lathe arranged for turning special ring gages having a reverse curve in the bore. The master templet *A* was first made to the exact curvature represented by a cross-section of the ring gage bore. Bearing against this templet there is a roller attached to yoke *B* connecting with the tool-block. The cross-slide screw is disconnected so that the slide is free to move, and springs are used, as shown, to hold the roller firmly in contact with the templet. As the tool-slide is fed along, the curvature of the templet is duplicated in the bore of the gage. It is, of course, essential to locate the cross-slide and templet in such a position that the curved part of the bore is formed at the proper place. This same arrangement is used for grinding the hardened gage rings, as shown in Fig. 14. An ordinary traverse grinding attachment is used.

Thread-cutting on Bench Lathes

Two different types of attachments are used on bench lathes for cutting screw threads by traversing a single-point tool. One type is arranged to traverse the regular tool-slide by rotating its feed-screw from the headstock spindle through change-gears selected to give the required pitch. The change-gears are held by a special plate or bracket fastened to the headstock end, and rotation is transmitted to the longitudinal feed-screw through a telescopic shaft having a universal joint, which permits changing the position of the slide-rest on the bed if necessary. An attachment of this kind provides a convenient means for cutting a wide range of pitches, and it is used for general threading operations.

If duplicate parts are to be threaded, as in manufacturing, the chaser type of attachment is used ordinarily, because it provides an exceptionally rapid as well as accurate method of cutting screws with a single-point tool. The mechanism is similar in principle to the chasing attachment used for

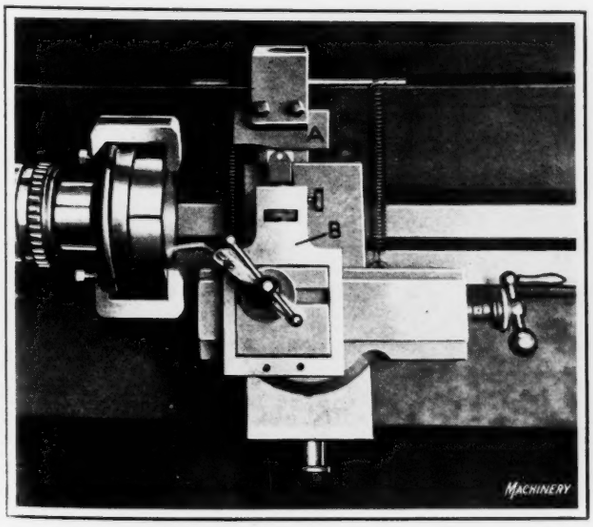

Fig. 13. Form-turning by reproducing the Curvature of a Master Templet

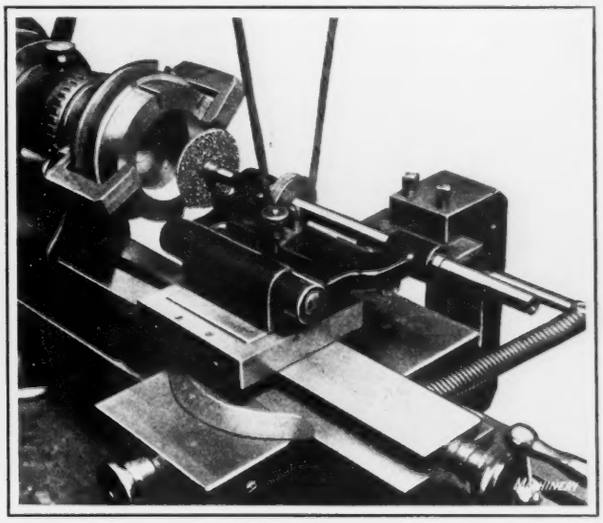

Fig. 14. Form-grinding by utilizing the Same Arrangement as shown in Fig. 13

Fig. 15. Cutting a Thread by using the Chasing Attachment

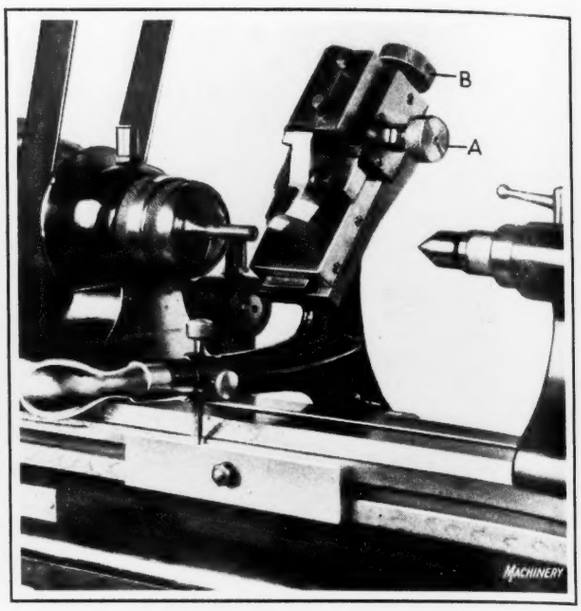

Fig. 16. Threading Plug Gages on a Production Basis

many years on the Fox type of brass-working lathe. The thread-cutting tool *A*, Fig. 15, is held by an arm and lever which has a handle at the front, and is clamped at the rear to the bar *B* extending along the bed. Another arm *C* carries a nut section which engages a short lead-screw *D*. This lead-screw is rotated through gearing from the headstock spindle, and whenever the nut on arm *C* is held in engagement with it, the chaser bar and tool are traversed for cutting the thread. Most bench lathes have change-gears, so that the number of threads per inch cut on the work may either conform to the number on the lead-screw or be some multiple of this number. Another method of obtaining different pitches is to change the lead-screw and nut for each pitch instead of using extra change-gears.

Fig. 15 shows an Ames lathe being used for cutting a right-hand thread on a steel spindle. The cone pulley belt is crossed to rotate the work backward and permit using a tool with the cutting point up. The depth of cut is regulated by stop-screw *E*, and whenever, as in this case, more than one cut is needed, the tool is fed down to the full-depth position by turning another adjusting screw on the opposite side of the arm. In taking successive cuts, the tool arm is lifted slightly at the end of the cut, thus disengaging the nut from the lead-screw; then the chaser bar is quickly returned to the starting position, after which the nut is again dropped into engagement, whereupon another forward or cutting movement begins immediately. With this type of fixture, a thread may be cut quickly, even though several cuts are required, as is ordinarily the case in threading steel.

A front view of a bench lathe made by the Rivett Lathe & Grinder Corporation, Boston, Mass., which is equipped with a thread-chasing attachment is shown in Fig. 16. The operation is that of threading plug gages on a production basis. The threads on a lot of gages are first roughed out and then rechucked for the finishing cut. In order to set the tool readily to match the thread for the finishing cut, a special cross-adjustment was provided, the tool being moved parallel to the spindle axis by screw *A*. With this attachment the tool is fed inward for successive cuts by screw *B*. The threading tool used in this particular case is of the Pratt & Whitney type.

Another Rivett lathe arranged for threading the end of a spindle is shown in Fig. 17. In this case a thread-milling attachment is used, and the lathe is of the back-geared precision type and has a lead-screw and change-gears. In

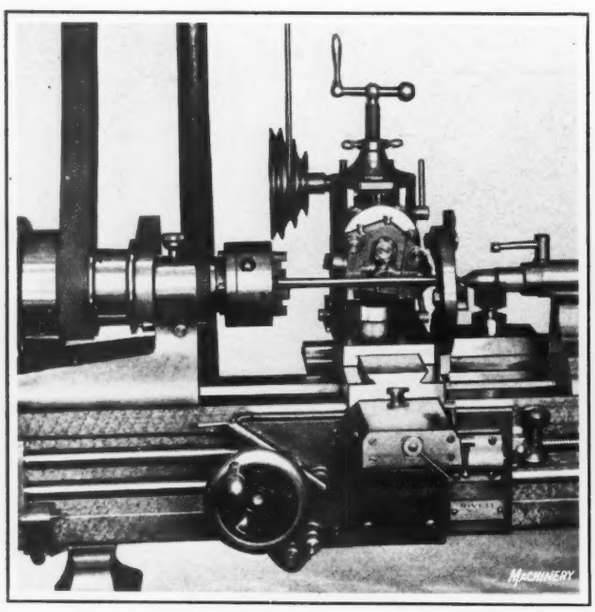

Fig. 17. Lathe equipped with a Thread-milling Attachment

Fig. 18. Milling Slots in Bench Lathe Collet Chuck

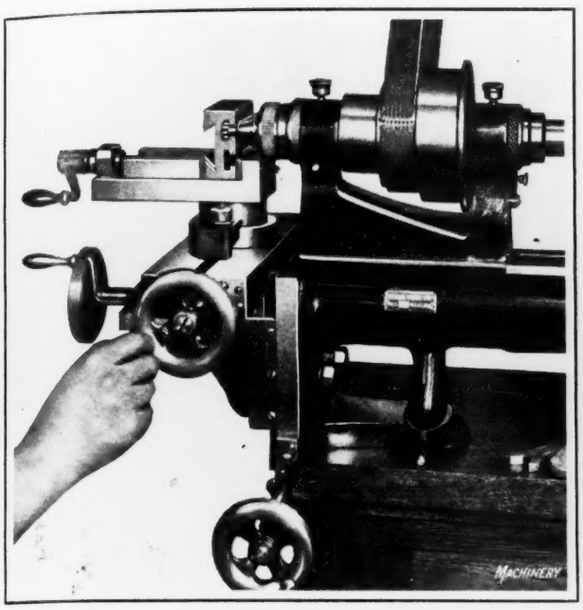

Fig. 19. Attachment employed for milling T-slots in the Tool-blocks of Bench Lathes

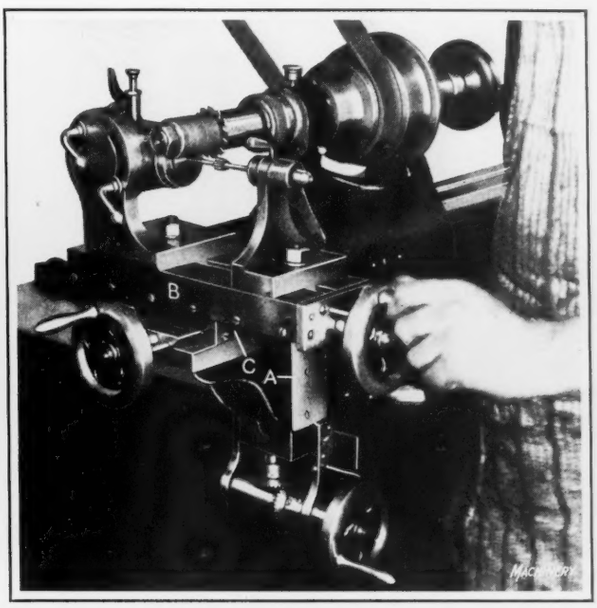

Fig. 20. Cutting Small Brass Pinion, using Dividing Head and Milling Attachment

using the thread-milling attachment, the lathe is geared the same as for cutting with a single-point tool, and the attachment, with the cutter inclined to suit the helix angle of the thread, is traversed by the lathe carriage.

Bench Lathes Equipped for Milling

Bench lathes are often used for milling in connection with such operations as fluting special reamers, taps, counterbores, or other cutters, and making small punches, dies, pinions, etc. Milling attachments vary in regard to the range of adjustment and methods of applying to the machine. For instance, some have a single vertical slide with or without a swivel or angular adjustment and are mounted upon the regular compound slide in order to obtain cross and lengthwise movements. Other milling attachments are mounted directly on the bed in front of the headstock, and have their own slides, as well as swivels for angular adjustment in two planes. Another variation consists in bolting the attachment to one end of the bed, instead of locating it on the bed or slide-rest. One design is held to the right-hand end of the bed, and another to the left-hand end, the headstock in the latter case being reversed. The most common practice is to use the milling attachment for holding the work and the lathe spindle for driving the cutter, but some attachments are designed to drive the cutter, which operates upon work while it is held in the lathe spindle.

Fig. 18 shows how an Ames milling fixture is used for milling slots in bench lathe collet chucks. This fixture has three slides—*A*, *B*, and *C*. Slide *A* provides cross-movement; slide *B*, lengthwise movement; and *C*, vertical movement. The bearing of the work-holding spindle is attached to slide *C*, and has angular adjustment about a horizontal axis. The vertical bracket *D* and slide *C* also have angular adjustment about a vertical axis, which, in conjunction with the other movements mentioned, provides universal adjustment, so that the work may be placed in any position relative to the cutter. Degree graduations on the edges of the two swiveling members show their respective positions. While cutter *E* is being driven by the main spindle of the lathe, the work is advanced slowly by moving cross-slide *A*, until a positive stop is encountered to regulate the length of the slot. An index-plate and pawl *F* at the rear end of the work-spindle provides means of spacing the slots accurately.

The slots in these collets have two widths, the inner part being narrower than the outer section. In milling them, the wider section is first milled to the proper radial depth; the cutter is then replaced with one having the same width except for a narrow ring around the outer or toothed edge, which is made thinner to mill the small section of the slot. In this way the cutter is steadied by the wider part of the slot, and the small section is accurately centered relative to it, which is important for this particular operation.

A Stark milling attachment is shown in Fig. 19 applied to the milling of T-slots in bench lathe tool-blocks. As the illustration shows, this attachment is bolted to the left-hand end of the lathe bed, instead of being mounted on the bed in front of the headstock. The angle-plate at the end, which is dovetailed to receive the vertical slide, forms an integral part of the bed. The position of the headstock is reversed to locate the chuck, or cutter-holding end, opposite the milling attachment. For many milling operations, such as tap or reamer fluting, gear-cutting, and so on, a dividing head is used in connection with the milling attachment.

Fig. 20 shows an example of work requiring a dividing head, the operation being that of cutting small brass pinions. A notched index plate and pawl is used for dividing. Provision is made

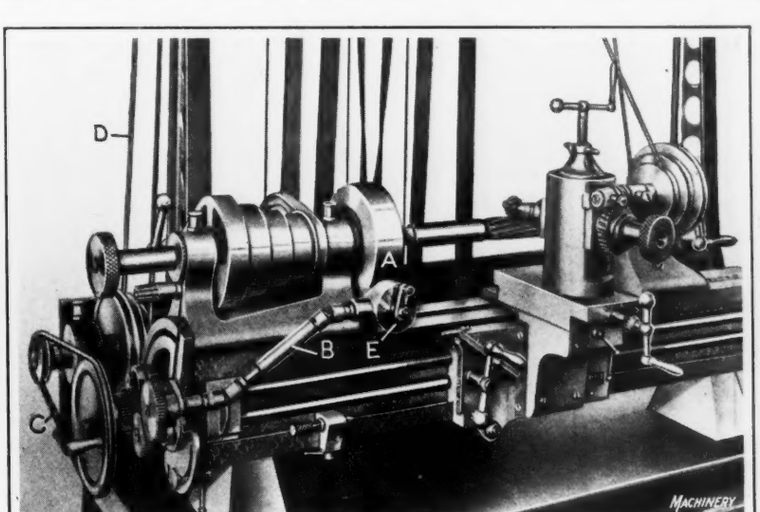

Fig. 21. Spiral Attachment used for Helical Fluting and Similar Operations

for inclining the dividing head spindle for angular work. This view shows clearly the three slides *A*, *B*, and *C* for providing vertical, cross, and lengthwise adjustments.

Fluting Reamers on Bench Lathe

A Rivett precision lathe equipped for milling reamer flutes is shown in Fig. 21. The milling attachment is mounted on the lathe carriage in a position ordinarily occupied by the cross-slide. The slow rotation of the reamer necessary to mill helical flutes is obtained by using a spiral attachment. A worm-wheel enclosed at *A* is screwed on the spindle, and is engaged by a worm which is rotated through a telescopic shaft *B*, having a universal joint. This shaft, in turn, is connected to the lead-screw through change-gears. The drive for the spiral attachment is through round belts *C* and *D*, and the spindle of the milling attachment has a separate belt drive, as shown. An index mechanism at *E* is used for obtaining the desired number of flutes.

Cutter-relieving Attachment

The relieving of a small cutter of the type used for milling clock and instrument gears is shown in Fig. 22, which illustrates the use of an Ames cutter-relieving attachment. The driving pulley *A* transmits motion to the main spindle through pinion *B*, and the large gear shown. A cam *C*, which ordinarily has one lobe, oscillates lever *D* and a shaft at the rear, each time the cam lobe engages the roller carried by *D*. This oscillating movement is transmitted to the cross-slide by arm *E*, which bears against a thumb-screw at the rear.

The ratio of gearing is such that the spindle makes one revolution while the driving and cam shaft revolves as many times as there are teeth in the cutter, assuming that a one-lobe cam is used. Cutters of different tooth numbers may be relieved by changing the ratio of the gearing or by using a cam having more than one lobe, the exact arrangement depending upon the number of teeth. When the attachment is in use, the cross-slide is fed forward slightly after each revolution of the cutter by turning the thumb-screw that is in contact with lever *E*. The regular slide-rest is used with this attachment, and the formed tool may be of the straight type shown in the illustration or of the circular form attached to a tool-block.

Screw-slotting Attachment

The Stark screw-slotting attachment shown in use in Fig. 23 is designed for slotting comparatively small lots of special screws, such as might be produced in a bench lathe. The screw *A* to be slotted is held in a V-shaped seat between two jaws, by the pressure of a spring at *B*. The screw-head is forced upward against the revolving saw by pressing down on the hand-lever until stop-screw *C* is encountered, which controls the depth of the cut. Then the hand-lever

Fig. 23. Bench Lathe Screw-slotting Attachment

is swung to the left, thus turning the fixture about its vertical pivot until stop-pin *D* engages the opposite end *E* of the notch in the fixture plate; additional side pressure on the hand-lever forces the jaws open against the tension of spring *B*, thus releasing the work. An unslotted screw is then inserted, and the fixture turned back to the slotting position shown in the illustration. This entire operation requires only a few seconds.

Bench Lathe Controlled by Foot-treadle

The bench lathe shown in Fig. 24 differs from the ordinary design in that it is without a cone pulley and is under the control of a foot-treadle, so far as the operation of the spindle and chuck are concerned. This is a Stark machine, and it is known as the "spring bind lathe." It is so named because the chuck is held in the closed position by the pressure of helical springs placed between two collars *A*. When a part is finished, the workman depresses the foot-treadle which causes the belt to be shifted to the loose pulley, and at the same time opens the chuck and applies a brake to stop the spindle quickly. The chuck is opened through the action of lever *B*, which compresses the springs at *A* and also acts as a brake. The belt-shifter is moved at the same time by its connecting wire *C*, which leads down to the foot-treadle.

This type of lathe is used for manufacturing duplicate parts, especially if the work is light, and rapid frequent chucking is essential. The particular machine shown is set up for boring and recessing brass dust rings for bench lathes. The arrangement of the lever-operated tool-slides commonly used with this type of machine is clearly shown in the illustration. The ring is first bored, using the upper slide, which provides the lengthwise movement, and then the cross-slide is used for feeding the V-shaped recessing tool.

Although an attempt has been made in this and the preceding article to show diversified examples of bench lathe practice and typical applications of different attachments, it will be apparent to the experienced bench lathe user particularly, that operations both in tool work and in manufacturing might be multiplied indefinitely, as bench lathes are, practically speaking, in universal use. However, the operations and equipment described serve to show some of

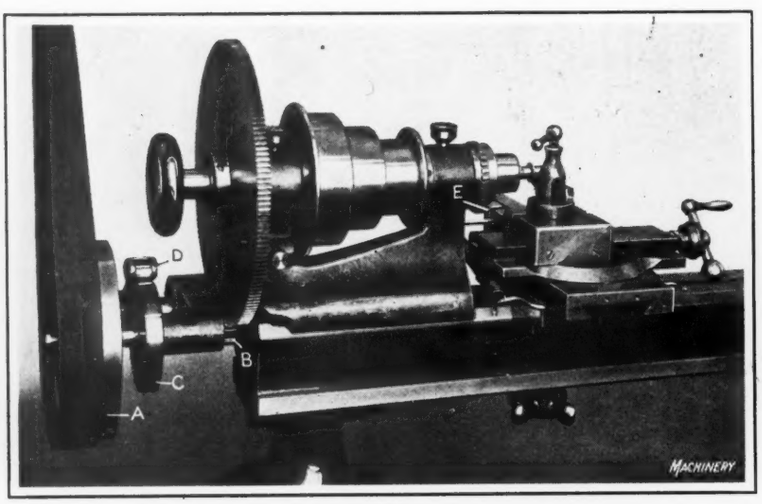

Fig. 22. Cutter-relieving Attachment for Use with Bench Lathe

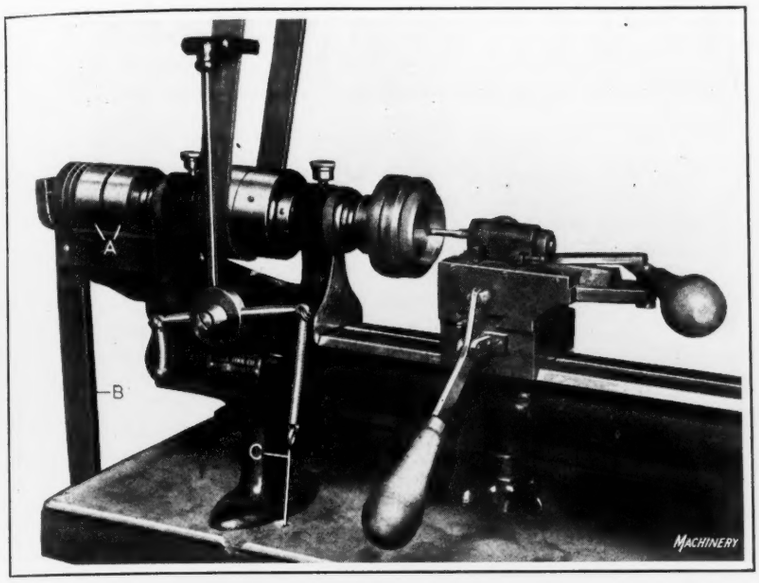

Fig. 24. Bench Lathe arranged for Foot-treadle Control

the possibilities and advantages of bench lathes, not only as means of producing parts requiring a high degree of precision, but also as efficient machines for use in many lines of interchangeable manufacture.

* * *

A NOTABLE ENGINEERING WORK

One of the most remarkable engineering projects under way at the present time in the world is the building of the vehicular tunnel under the Hudson River between New York and New Jersey. Some of the interesting features of this work are briefly described in the *Journal of the Franklin Institute*. There will be two tunnels, one for east-bound and one for west-bound traffic. Each tunnel is 29½ feet in diameter and 9,250 feet long. The roadways will be 20 feet wide and have an overhead clearance of thirteen feet six inches. The rest of the space will be required for the ventilating system, which consists of air ducts at the top and bottom of each tunnel. Fresh air under compression will be forced into the lower duct and from there into the roadway itself through air flues and expansion chambers placed at intervals of fifteen feet along each side of the tunnel. This will force the vitiated air out through openings, also at fifteen-foot intervals, into the top duct, whence it will be drawn out by large fans and discharged through the caissons at the ends of the tunnels.

The tunnels are being constructed from both ends and will meet somewhere in the middle of the river. The calculations on the work are so accurate that when the tunnels meet they are expected not to deviate half an inch. They are built in ring sections of fourteen cast-iron plates, each plate weighing a ton and a half. The excavating is done in shields, or movable heads, which are pushed forward two and a half feet at a time by thirty hydraulic jacks. As the shield moves forward, the rings are added one by one. When completed, the tunnels will have a protective covering of broken stone, and at each entrance there will be a modern pier above the tunnel as it reaches the land, in order to avoid the possibility of a ship running into the tunnel where it comes up.

One of the most difficult problems in connection with building the tunnel has been proper illumination. In order to study all suitable systems of illumination under approximate operating conditions, an exact model of the tunnel, on a scale of one inch to one foot, and ten feet long, was constructed by the Illuminating Engineering Laboratory of the Westinghouse Lamp Co. Exact replicas of the proposed lighting units were installed in this model tunnel, furnishing an amount of light corresponding accurately to the desired illumination. The model tunnel is complete to the most minute detail.

It would seem at first that lighting the tunnels would be merely a matter of installing plenty of units, but that is not the case. It is necessary in the first place to eliminate all glare, so the units, one every twenty feet, were encased in metal boxes sunk into the concrete of the tunnel, and diffusing glass used to cover them. Next, the lights had to be so placed as to secure the greatest possible amount of reflected illumination from the walls and ceiling. Third, and most important, it is extremely necessary that all shadows between cars be eliminated in so far as possible, as sharp shadows would cause drivers to misjudge distances, which might result in accidents.

* * *

MAKING LARGE NUTS FROM BAR STOCK

The unusual feature of the method of making nuts here illustrated is the feeding of a drill 3 5/32 inches in diameter through solid bar stock. The stock measures 5⅜ inches across flats and the nuts are made 3½ inches thick. Each nut is drilled through, chamfered at one end, and cut off. The production averages one nut every one and three-quarter minutes, although the estimated average before the installation was one nut every two and one-half minutes. The operation is performed on a motor-driven Cleveland automatic.

With each forward movement of the main slide, the drill is fed into the stock to a depth equal to the thickness of the nut plus the cut-off. Simultaneously with the drilling, two tools on the front slide and one on the rear slide also act on the work. The right-hand tool on the front slide and the tool on the rear slide perform the cutting off, the time required for this step being somewhat longer than that required for drilling. These cutting-off tools are so set that the rear tool faces the end of the nut dropping off, and the front tool faces the end of the nut to be produced next. The front tool recedes slightly before the cutting off is actually accomplished, and so this step is performed by the rear tool. The left-hand tool on the front slide chamfers the top of the nut to be produced while the nut that has been completed is being cut off. The nut drops off when the drill has been returned to about the position shown.

The stock-stop *A* is operated by cam *B*. It is advanced a short distance to locate the stock, and then returned to the position shown, where it does not interfere with the operation. Oil-tubes in the drill supply cutting compound in the drilling step, the compound being fed to the drill through the flexible hose shown entering the tool-slide at the shank end of the drill in the illustration.

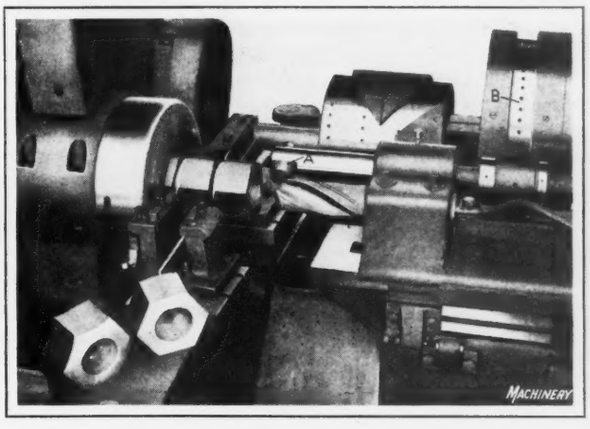

Producing 3½-inch Nuts in an Automatic from Solid Stock

OXIDIZING AND REDUCING AGENTS

Any substance that causes an element or compound to combine with oxygen is called an *oxidizing agent*. A substance that removes oxygen, or elements similar to it, is called a *reducing agent*. Reducing agents are especially useful in obtaining metals in the free state from their ores.

CONCRETE POLES

Concrete poles for transmission lines are of three general types, known as solid, hollow, and trussed poles. In the United States, the majority of poles now in use are of the solid type, whereas in Europe hollow poles are used principally. Solid and hollow poles may have the same outward appearance, being either round, square, hexagonal, octagonal, or square with beveled corners. Reinforcing rods are placed near the outer surfaces, the number of rods varying with the size of pole and the load it must stand. Many square poles have only four rods, one being in each corner. Solid concrete poles have considerable flexibility and strength. A 35- or 40-foot pole fixed solidly in the ground for 6 feet of its length may be deflected from 6 to 8 inches and come back to its normal position, after removal of the load.

BELTING CEMENTS

Two kinds of cement are used for joining the ends or plies of leather belting to produce what is generally termed an endless belt. One kind is referred to as "regular" belting cement and the other kind as "waterproof" belting cement. Both kinds can be obtained from the leather belting manufacturer, and either has ample strength and durability. When a belt is to be used in a dry place, where it is not subjected to moisture, the regular belting cement is employed, while the waterproof cement is used in damp places.

ENGINES OF MULTIPLE EXPANSION TYPE

Condensation losses in steam cylinders are due principally to the change in temperature of the interior surfaces caused by the variation in temperature of the steam at initial and exhaust pressures. If the temperature range be divided between two cylinders which are operated in series, the steam condensed in the first or high-pressure cylinder will be re-evaporated and passed into the low-pressure cylinder as steam, where it will again be condensed and re-evaporated as it passes into the exhaust pipe. Theoretically, this should reduce the condensation loss by one-half, and, if three cylinders are used, the loss should be only one-third of that in a simple engine. In actual practice, the saving is not as great as this, but with the proper relation between the cylinders, these results are approximated. Another advantage gained by compounding is the possibility to expand the steam to a greater extent than can be done in a single-cylinder engine, thus utilizing, as useful work, a greater proportion of the heat contained in the steam. This also makes it possible to employ higher initial pressures, in which there is a still further saving, because of the comparatively small amount of fuel required to raise the pressure from that of the common practice of 80 or 90 pounds for simple engines, to from 120 to 140 pounds in the case of compound engines. With triple expansion, initial pressures of 180 pounds or more may be used to advantage. The gain from compounding may amount to about 15 per cent over simple condensing engines, taking steam at the same initial pressure. When compound condensing engines are compared with simple non-condensing engines, the gain in economy may vary from 30 to 40 per cent.

MACHINE TOOL DEFINED

A machine tool is a machine-building tool; that is, a tool or machine for building machinery. Machine tools have also been defined as machines which, when taken as a group, will reproduce themselves. This definition has the disadvantage of being general rather than specific, and as a secondary definition the following has been suggested: "A machine tool is any metal-working tool the waste from which is in the form of chips." This is specific and can be easily applied to any particular machine. It is not necessary to define a metal "chip," but it may be advisable to recall that the sparks from a grinding machine are chips, even though small. This classification includes all metal-cutting machinery the action of which is a progressive cutting away of surplus stock—a gradual reduction in size until the finished dimensions are reached—but excludes sheet-metal working machinery and metal-forming and forging machines. A press, when used for piercing sheet metal, has very little in common with a lathe, a milling machine, or a planer. They are all metal-cutting machines, but here the similarity ceases. The metal is not in the same form, and the cutting tools have nothing in common with other metal-cutting tools as to construction or cutting angles. When a press is used for forming, it has nothing in common with lathes, etc., other than the fact that they are all metal-*working* machines, as are also power hammers, bulldozers, swaging machines, etc.

RATE OF COMBUSTION FOR BOILERS

The weight of coal burned in a boiler, per square foot of grate surface per hour is called the *rate of combustion*. This rate commonly varies from 12 to 25 pounds in the case of power plants operating under natural draft, increasing to 30 pounds or more when forced draft is employed. With heating boilers, the combustion is somewhat less, as it is unusual to force the boilers so much, except in large plants. Here the rate drops to 8 or 10 pounds in boilers of medium size, and to 6 or 7 in those of small size, depending upon the care they receive and the strength of chimney draft.

STEEL SEASONING PROCESS

Pieces of steel and also castings, if left standing a long time, will gradually settle to a more or less permanent state. This method of seasoning, however, is slow and usually impracticable as applied to manufacturing. An artificial seasoning process which is utilized in precision gage block manufacture, consists in subjecting the gages to alternate changes of heat and cold. A lot of the gages contained in a wire basket, are immersed in a bath, the temperature of which is well below zero, this temperature being maintained automatically by a refrigerating apparatus. After the gages have come to the temperature of this cold bath, they are quickly transferred to a bath which is heated to about 220 degrees F. After heating thoroughly, the gages are again transferred to the cold bath, and this successive heating and cooling is continued for several hours, which completes the artificial seasoning process.

WATTMETER

A wattmeter is an electrical instrument used for measuring electric power, and is employed especially for measuring alternating-current power. Wattmeters are used both as switchboard instruments and as portable instruments. The latter are made in sizes up to 200 amperes and 750 volts. Portable instruments with larger currents and higher voltages have been made, but are not generally used.

OSCILLOSCOPE

Oscilloscope is an optical-mechanical apparatus by means of which it is possible to observe the action of high-speed mechanisms under actual working conditions. With this device, the action of the mechanism, moving at high speed, may be studied as if it were moving very slowly or actually standing still. This is accomplished by the use of a special type of electrical lamp, the flashes of which are synchronized with the movements of the revolving mechanism. If the lamp flashes illuminate the moving part repeatedly at the same point in its travel, it will appear stationary, because it is illuminated only at the instant when it passes a given position. If the successive flashes of the lamp illuminate the moving part at points slightly in advance of each other, the part will have the appearance of moving slowly.

DUCTILITY

The ductility of metals refers to their susceptibility of being drawn into wire. The finer the wire that can be drawn from a given metal, the more ductile it is. Of the metals, platinum is one of the most ductile. Next in order, of the more common metals, come silver, iron, copper, gold, aluminum, zinc, tin, and lead. The ductility is closely related to the property of metals known as "elongation."

CHILLS FOR CASTINGS

Chills are pieces of metal placed in a mold to harden certain surfaces by having the molten metal come into contact with the chill. Chills may be used as part of the mold or in the same capacity as a core. A popular example of chilled work is a car-wheel rim in which that part of the mold that forms the rim is of metal. The patternmaker's job, in this case, is to fit the pattern to the chill as they are rammed up together; if a round hole is to be chilled, core-prints are fitted to the pattern and the chill is made with considerable taper so that it may be driven out. It is sometimes desirable to make sections of pipe to bolt together without finishing the flanges; and to do this, metal ends are used in the mold, not to chill the casting but to form a finished flange. In this case, the flanges are made long to form core-prints for the metal ends, the face sides of which are grooved with concentric V-grooves to give the packing a hold. The core is carried on an arbor that fits openings turned in the end pieces which are also drilled with holes through which the bolt hole cores are pushed.

BREAK CLEARANCE

The term "break clearance" is sometimes used to indicate the clearance between a blanking punch and its die. The purpose of this clearance is to reduce both the pressure required for the blanking operation and the strain on the punch; thus, the stock subjected to shearing action between the edges of the punch and die, breaks easier, which accounts for the name "break clearance."

DYNAMITE

Dynamite is simply nitroglycerine to which an absorbent has been added in sufficient quantity to form a solid mass, such as diatomaceous earth, clay, ashes, or carbon. It is important that the adulterant have the correct absorbing qualities, for an excess of nitro will naturally exude, while if the absorbent is in excess, it is likely to crumble. Either condition is likely to give serious trouble at some unexpected moment. Both nitroglycerine and dynamite are particularly dangerous, owing to their instability.

BOARD MEASURE

Board measure, as employed for measuring lumber, is based on the assumption that all boards are 1 inch thick. In order to obtain the number of feet board measure, multiply the length in feet, the width in feet, and the thickness in inches. For example, a board 2 inches thick, 10 feet long, and 9 inches wide would equal $10 \times \frac{9}{4} \times 2 = 15$ feet board measure. Board measure is frequently abbreviated B.M.

WASTE

There are two principal classes of waste. One class is intended for cleaning purposes and the other for holding a lubricant, as, for example, when used as a packing material in the journal boxes of railway cars or in some classes of motor bearings. The various grades of cotton waste comprise the first class, whereas wool waste comprises the second class, which is used as packing. The cotton or cleaning waste is by far the most important commercially, if judged by the extent of its use. The most essential property of waste is its oil-absorbing quality. Poor waste is soon saturated with oil or grease, whereas good waste will absorb much more oil and may be turned inside out and used again. A high absorbing quality is desirable both in cotton and wool waste, but the importance of this feature might easily be overlooked, especially in the case of waste used exclusively for cleaning purposes. To obtain a waste capable of absorbing the greatest amount of oil and grease, it is essential, in the first place, to use the right kinds of raw materials and, second, to mix these materials thoroughly and separate the various threads or fibers completely, so that there are no solid masses or large thick strands extending through the waste.

HELICAL GEARS OF SINGLE TYPE

The common forms of gearing for connecting parallel shafts are spur gears, single helical or twisted gears, and double helical or herringbone gears. Spur gears are the simplest to design and cut, and meet the requirements for a large percentage of parallel shaft drives, but single helical gears are used extensively for electric railway service, in preference to spur gears, because the helical teeth are conducive to smooth continuous action which prolongs the life of the gearing, as compared with spur gears. The helix angle of the teeth is quite small (usually from 7 to 10 degrees), so that the end thrust is well within the capacity of the oil film on standard armature end-thrust collars and axle collars.

RUBBER BOND FOR GRINDING WHEELS

Rubber wheels are bonded with special mixtures of rubber, and then vulcanized. Wheels of this class have substantially the same advantages as elastic wheels, except that they can be made harder and thinner to meet more severe conditions. Both elastic and vulcanized wheels are used for cutting off tubing, wire, thin sheets of steel or brass, and parts that are difficult to hold while cutting off with the commonly used tools.

IRON ORE GRADING

Iron ore is graded according to the percentage of phosphorus it contains. A low percentage of phosphorus—under 4½ per cent—makes it available for the Bessemer steel-making process, and such ore is called Bessemer ore. The non-Bessemer ore, which contains a higher percentage of phosphorus, is made into steel by the basic open-hearth process, which admits of the elimination of the phosphorus.

Machine Forging Dies

A Series of Articles on the Design and Use of Forging Dies

By C. C. HERMANN
Chief Engineer, Litchfield Mfg. Co., Waterloo, Iowa

IN the two previous articles on this subject which appeared in May and June MACHINERY, machine forging dies for such work as the crankshaft of an internal combustion engine were considered. Forgings of that class must undergo subsequent machining operations to fit them for use. There are, however, many pieces forged on a quantity production basis which are not given a final machine finish. This class of work is also rough when it leaves the forging department, but the quality of the finish must be higher. A number of the parts used in agricultural and similar equipment belong to this class of work. Many of the pieces are simply drawn out, flattened, or bent to the desired shape, the work in some cases being accomplished under a drop-hammer, and in other instances by means of power presses or bulldozers. The present article will give a few die examples typical of this class of work.

Dies for a Steel Hinge

At *A* in Fig. 1 is shown a steel hinge made of 7/16-inch open-hearth round steel. One end is flattened and punched for fastening to another part, while the opposite end is left round and is bent in two directions—60 degrees one way and 35 degrees the other. The piece is made in large quantities exceeding 2000 pieces per set-up of the machine. Before forging, the blanks are sheared to length in a shearing die, which cuts five pieces at each stroke of the machine. Thus the forging operation is done on a piece approximately only 6¼ inches long.

The drop-hammer dies used for producing this hinge are shown in Fig. 2; they are of the two-operation type. The 60-degree bend is made with openings *A*, which accommodate four pieces at one time, two on each side. The pieces are then transferred to openings *B*, and the second stroke of the machine produces the 35-degree bend and flattens the opposite end of the piece. The next operation consists of punching two 7/32-inch holes in the flat end. It will be noticed that no allowance for flash has been made in the die recess, the operation being comparable to a roughing one. The edges may be slightly irregular, but the function of the piece permits slight irregularities.

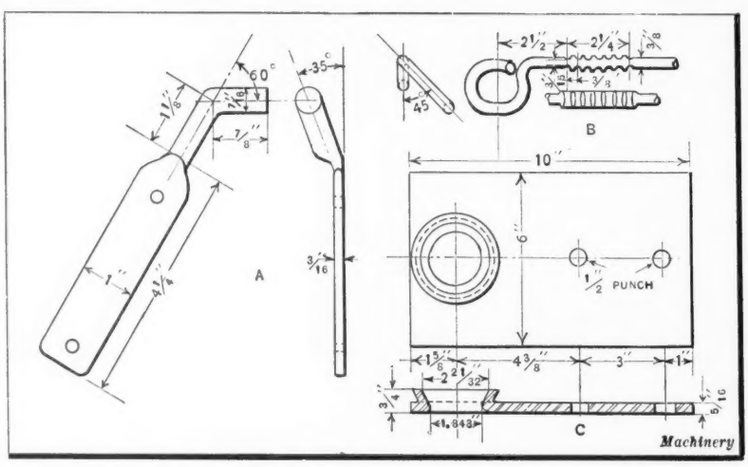

Fig. 1. Typical Examples of Forgings that do not require Any Machine Operation subsequent to forging

The lower block of a set of dies which may be used under a spring hammer for producing the same piece is shown in Fig. 3. In this case the flat portion of the hinge is produced by merely using a flat-faced top block, and the 35-degree bend is obtained by means of the offset at the front edge of the die. The 60-degree bend is produced in a separate operation in a small power press equipped with a set of bending dies. A third method of making the hinge is by means of rolls, in which case the flat end is rolled to the desired width and thickness by means of successive width and edge rolls. Then both bends on the round portion are made under a light press in an operation separate from the major one.

This example indicates that there are many ways open for producing similar work, the method to be selected for any given job depending upon the quantity required and the equipment available. The drop-hammer method was adopted for this part as giving the highest number of pieces per hour and the best results with regard to uniformity, the duplication of parts being a point of importance.

Cold-forging a Series of Notches

Another forging typical of hundreds that require a high rate of production is shown at *B* in Fig. 1. This part constitutes a shifting element on which there are notches to permit the making of adjustments. The ring is easily produced in an eye-bending machine. However, the die for producing the notched portion embodies several interesting features. It is shown in Fig. 5, and is used on a small power press. The upper and lower die-blocks *A* and *B*, respectively, are made from a carbon tool steel that is water-hardened at a temperature between 1400 and 1475 degrees F. The forging operation is performed cold. Experiments have shown that dies of this type give longer service when made out of low-carbon steel, carburized and hardened. The life of dies made from straight carbon tool steel depends upon the working temperature of the faces, such dies possessing a high resistance to wear when heated to from 400 to 500 de-

grees F. Alloy steel dies, such as nickel, nickel-chromium, and chrome-vanadium, are most efficient at about 850 degrees F, while a set of dies containing tungsten should be held at a working temperature of about 100 degrees F.

Forging a Collar around a Punched Hole

A low-carbon steel plate with a collar forged around a hole which is punched through one end of the plate is shown at *C*, Fig. 1. The plate is first sheared and then at the point where the collar is to be formed, a ⅞-inch hole is punched. The piece is next heated uniformly to just under a welding temperature for the forging operation. The forging is performed in a bulldozer equipped with the dies shown in Fig. 4, in which *A* is the base-block; *B*, the ram block; *C*, the initial forging punch; *D*, the reverse punch; *E*, the arbor plate for punch *C*; and *F*, the arbor plate for punch *D*.

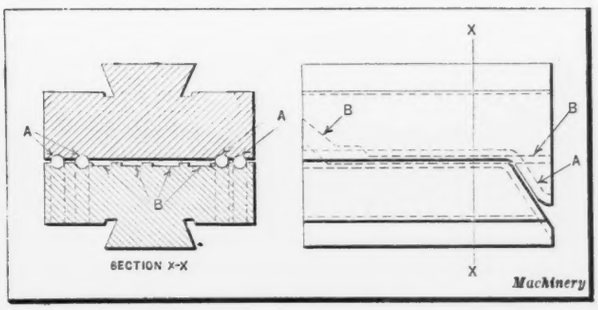

Fig. 2. Dies used in a Drop-hammer to forge the Hinge shown at A, Fig. 1

As the work is removed from the furnace, it is gaged over pin *G* in the base-block, with the punched hole directly in front of punch *C*. The collar is formed in this operation to fill a recess in arbor plate *E*. Then the piece is removed and passed to the opposite side of the die, where it is gaged over pin *H*, with the collar just forged facing the ram block. In this operation, punch *D* enters the hole and forges the collar to the desired angle, pushing the metal back against the baseplate to give the finished part a flat top surface with a slightly rounded corner where the inside of the hole joins the bottom surface.

Low-carbon steel may be worked safely at from a cherry to a bright red heat without danger of the fibers separating; however, the best practice is to heat low-carbon steel to just under a welding temperature. Because the granular structure is rather coarse after forging it is also advisable to reheat the part to a dull red. This annealing step restores the original structure of the steel and relieves the internal stress caused by the forging operation. The steel should not be subjected to unusual air currents while cooling, such as would be likely to be present in a doorway. Box trucks made from sheet steel serve satisfactorily as containers for use in cooling.

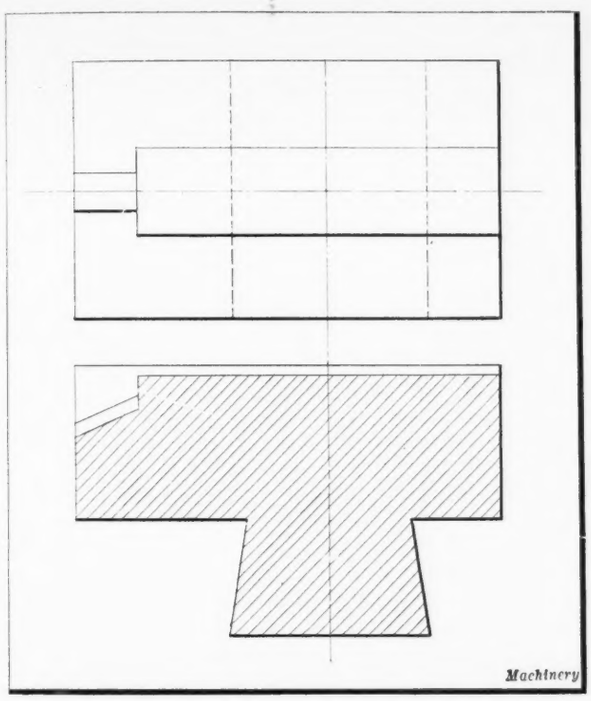

Fig. 3. Bottom Die-block employed under a Spring Hammer to forge the Hinge

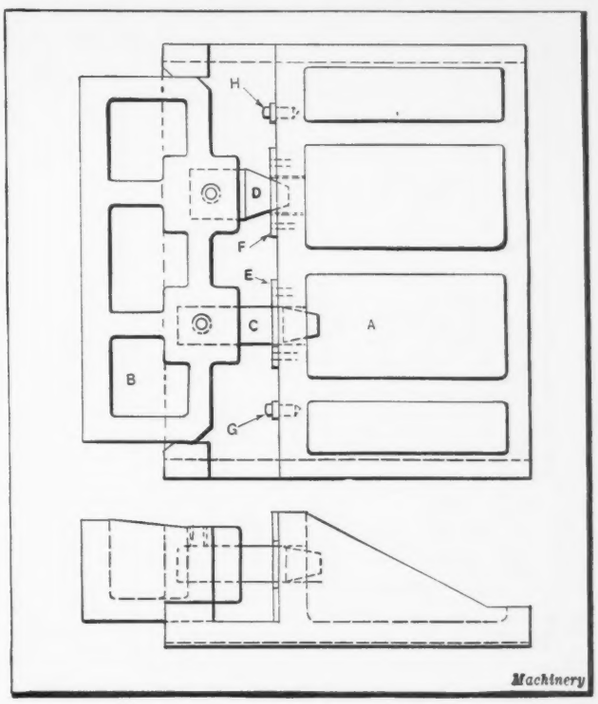

Fig. 4. Bulldozer Die Equipment for forging the Collar on Plate C, Fig. 1

The tool-steel bit shown in Fig. 6, which is intended for use in drilling wells, constitutes a slightly different class of forging from those thus far considered. This tool is 6 inches in diameter and 5 feet long. Tool steel requires somewhat different handling in heating than that accorded low-carbon steel. For instance, the drill illustrated is made of from 0.70 to 0.80 carbon water-hardening tool steel, and before forging, is heated to between 1500 and 1600 degrees F. The steel must be heated uniformly throughout, but soaking must be carefully

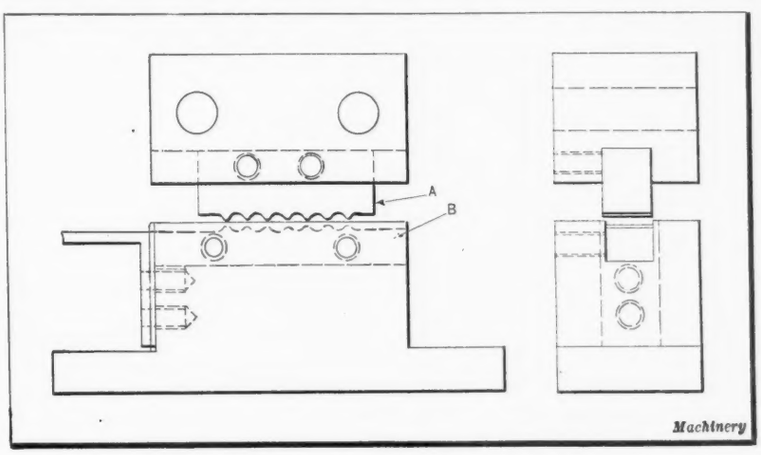

Fig. 5. Dies employed in forming the Notches in Part B, Fig. 1

avoided. "Soaking" consists of heating the steel too slowly, causing, in the case of carbon steels, a loss of carbon from the surface of the steel. Such a condition would result in the surface becoming softer than the center. Neither should the steel be heated too fast, for then unequal expansion may result and cause cracks to develop in hardening. If the surfaces are heated to a higher temperature than the center or if carbon has been lost, the surfaces will forge readily under the hammer blows, but the center will remain in practically the same condition that it was originally. A forging treated in this manner will have low strength and fail readily in service.

After the tool bit has been heated to the proper temperature, it is worked fast under a power hammer. The ultimate grain depends to a considerable extent upon the working of the steel under the hammer, and therefore its toughness and strength is practically determined by the forging process. When thoroughly worked from all sides at a heat not below a dull red color, the forging should possess normal toughness and strength. All corners are carefully rounded on the tool and square shoulders avoided, because many failures are due to sharp lines on the work.

In making a high-speed steel bit, the steel is heated slowly and thoroughly to a full yellow on only that portion which is to be forged. It is important that the heat extend to the center of the steel, and the steel must not be worked at a

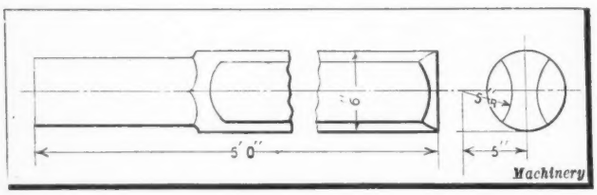

Fig. 6. Well-drill Tool Bit produced by forging

temperature below a bright red heat under any circumstances, as cracks and checks are likely to develop. Steel must be heated slowly to cause it to flow freely under the hammer, because when it is heated too fast, abnormal stresses due to unequal expansion cause cracks. The hammer blows must be heavy enough to influence the interior of the bar; otherwise the blows will be absorbed by the surface and the center will remain in practically the same condition as before the operation—a condition likely to result in a parting between the internal and external metal. For the same reason the blows should be reduced in intensity as the forging is reduced in size, as too heavy blows cause the metal to flow too fast for this class of material. If at all possible, the forging should be completed in one heat by working fast, but there are limits for speed, both high and low, that are best understood by the hammer man. After forging, the steel is reheated to a red heat and laid on the floor to cool.

One thing that causes much trouble in forging tool and high-speed steels is the removal of the forging from the bar. Some operators try to save time by nicking the bar and then breaking the forging off. This process may be followed safely, in the case of carbon tool steel, by simply laying the nicked bar over an anvil and striking it a blow, but it is not safe when high-speed steels are being handled, because when broken in this manner the structure of the steel is generally damaged. In the latter case, it is advisable to remove the piece from the bar by cutting either with a cold circular saw or a hacksaw.

* * *

The exports of industrial machinery from the United States to Spain increased from $1,370,000 in 1922 to $1,840,000 in 1923, an increase of 34 per cent, according to the Industrial Machinery Division of the Department of Commerce. It is estimated that the exports in 1924 will show a still further improvement. The value of the exports of metal-working machinery was $280,000 in 1923 as compared with $229,000 in 1922.

GROWTH OF SHEET-METAL PRODUCTION

By H. H. ARMSTRONG

There was a time not very far distant when castings were used in the making of practically every mechanical and electrical apparatus. In every machine industry the pattern shop and foundry were among the most important of the departments, and when operations were started pattern-makers were the first workers to be hired. The laying out of small castings was an important job, because they had to be made as light as possible and yet sufficiently strong.

Whenever castings are used, however, there is always a loss in scrap due to blow-holes, cracks, warped surfaces, cold shuts, and excessive hardness. Unfortunately, these defects cannot be located when the casting is in the rough, but appear at different stages of the machining; hence, the castings are scrapped after a great deal of expensive machining work has been performed on them. Castings that are to be polished and buffed are sometimes not found defective until the polishing operations, when sand-holes and blow-holes are found to spoil the appearance of the surface. Even when a casting finally emerges from the machine shop floor in perfect condition, there is a chance of its being broken in handling, on account of being brittle.

Pick up a device made about twenty years ago and compare it with the same article made today, and it will be found that punchings and stampings have taken the place of the castings. In many instances the device, therefore, is lighter, stronger, and cheaper. Today many factories are built and operated without pattern shops and foundries, but have instead a complete line of power presses and large stock-rooms for sheet-metal. In every field of industry, we find stampings taking the place of castings, whether it be in toys or automobiles, cooking utensils, or stoves.

The writer has been associated with the manufacture of devices using cast iron for the last five years. The heaviest drawback has been breakage. Today the same work is being done more and more by using punchings and stampings. The punched parts do not have to be handled so carefully, but may be thrown in piles and bins and used as needed. Sometimes objections are raised to punched parts, because they have wrinkles and dents which make them unsuitable for ornamental work, but such parts may be spun over a form to a perfect appearance. The rolling mills are now producing sheet stock suitable for any work from flat punchings to deep drawn shells, and it is only necessary to order the right material for the work to be done.

The objection that enamel or lacquer finish will not stick to the smooth surface of stampings is not to be taken seriously. Stampings may be sand-blasted and the surface thereby sufficiently roughened to hold any kind of enamel, lacquer, or paint. Of course, all surfaces of metal to be painted must be free from grease and oil spots before painting. Dirt is the cause of most paint not sticking to smooth surfaces.

* * *

ROTARY DIES FOR SHEET-METAL WORK

By GEORGE ABREY

In the "Questions and Answers" department of MAY MACHINERY, page 718, W. C. A. asks for information regarding rotary dies for cutting strips of 26-gage steel into dental formed pieces similar to the blanks from which piano hinges are formed before being rolled to receive the hinge-pin. From the illustration accompanying the question referred to, the writer assumes that the profiles of the die and the punch are required to be alike. For this reason it is suggested that the dies be built up from pieces of tool-steel bar stock having cross-sections of the same size as the dentals or projects of the work, the necessary cutting clearance being taken into consideration. The tool-steel pieces used in building up the dies are set in grooves machined in suitable castings. The cutting head is the rotary member and the die the stationary member. Both dies must, of course, be as long as the strip to be cut.

Hopper Design for Automatic Machinery

By ALBERT A. DOWD

WHEN materials are to be handled in bulk, they are often dumped into a hopper, from which they are removed through an opening in the bottom. It is difficult to classify the various kinds of hoppers and divide them rigidly into groups, but by considering the kinds of materials handled, we can make an arbitrary distinction sufficient for our purpose. The following list covers the types most commonly required:

1. Granular materials, which flow readily.
2. Liquids of all kinds, heavy or light.
3. Plastic materials, such as cement, asphaltum, and other mixtures, candy in certain forms, cream cheese, flour dough, etc., some of which are sticky or spongy.
4. Disk-shaped or oval pieces of uniform size and shape.
5. Cylindrical or conical pieces of uniform size or shape.
6. Irregular shapes of various kinds.

The first thing to consider in the design of a hopper for materials of any kind which are to be handled in bulk, is the general shape of the material; and the next, the manner in which the pieces or materials can be taken from the hopper—that is, their arrangement as they issue from it. Problems connected with these two points are some of the most important in automatic machine design, for upon their correct solution the functioning of the machine is largely dependent. A hopper may be cylindrical, conical, rectangular or any other shape best suited to the material. The different conditions encountered can best be understood by citing a few examples.

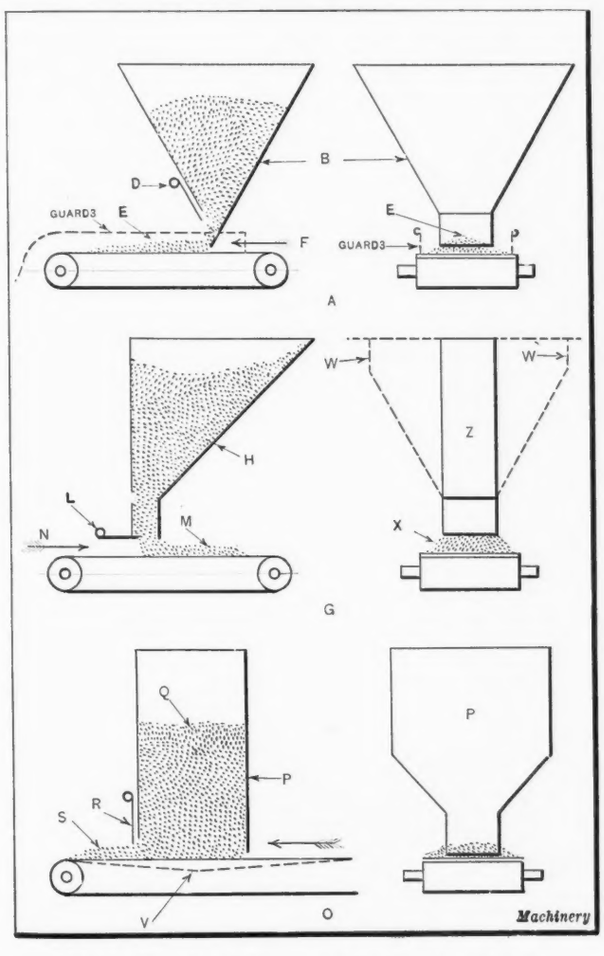

Fig. 1. Examples of Hoppers used for Granular Materials

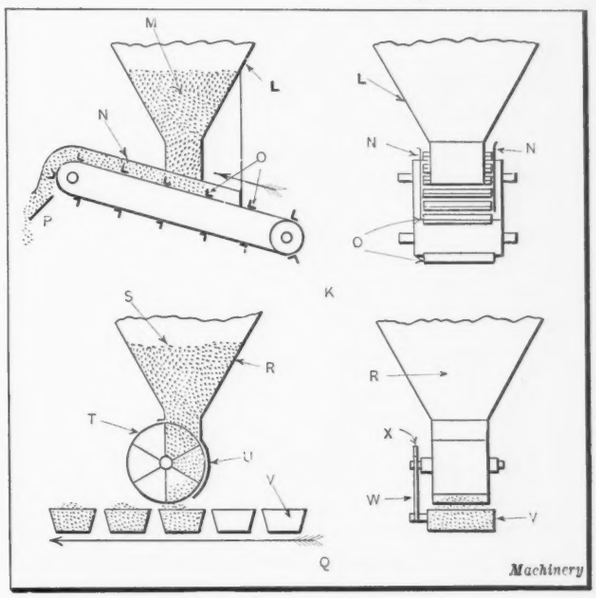

Fig. 2. Guarded Hoppers for Granular Substances

Hoppers for Different Substances

Granular substances, unless they are very irregular (as might be the case if the material is formed in crystals) will fall down almost any kind of an incline and through almost any form of opening. Liquids, of course, will do the same, but for pasty or gummy substances a gravity feed is usually impractical, and the material must be forced through the hopper by mechanical means. Disk-shaped or oval pieces are often fed by gravity and removed by inclined chutes. In such cases it is frequently necessary to use an agitator or some other form of mechanical feed to keep the flow constant. Cylindrical or conical pieces are very likely to clog in a hopper, and must be stirred up continually or agitated to prevent lodging. In some cases it is not even possible to use a regular form of hopper, and the pieces must be spread out on a large inclined plane.

In analyzing a given condition, we think first of the arrangement of pieces as applied to the method of handling after the work has passed through the hopper. Any piece of work can be picked up in the fingers and set in the desired position without difficulty, but to do this mechanically requires careful study and often considerable experimenting.

Examples of Hopper Design

Fig. 1 shows several examples of different forms of hoppers, to illustrate the manner in which the material passes through the hopper and is discharged from it. In example *A*, the hopper *B* is of pyramidal form. The material has no tendency to wedge or crowd, but flows readily in a continuous stream to the bottom of the hopper at which point an adjustable gate or valve *D* controls the amount passing through. If handled on a belt moving in the direction *F*, the material will naturally spread out as shown at *E*, so that it can be carried and delivered in the quantities required. Side guards can be used (as shown by dotted lines) if desired. In example *G*, one side of the hopper *H* is

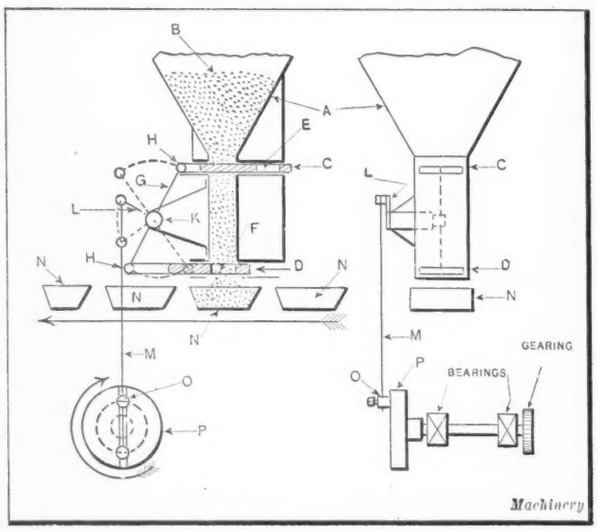

Fig. 3. Arrangement of Hopper Valves for handling Granular Substances

straight and the other is angular. Often the space available makes it more convenient to have a hopper of this form. In the other direction, the sides may be straight, as at *Z*, or tapered, as at *W*. A valve at *L* permits adjustment according to requirements, and the material is deposited on the belt *M*. Care must be taken in proportioning the opening of the hopper so that too wide a mass is not distributed on the belt, as shown at *X*, for in a case of this kind there would doubtless be considerable loss as the belt moves along.

In example *O* a somewhat objectionable form is indicated at *P*. With certain materials there might be no great objection to this form, but when handling anything of a heavy nature, the weight of the rectangular mass at *Q* might be sufficient to deflect the belt, as shown at *V*, thus causing variable amounts to pass by the valve *R*. Assuming that the belt travels in the direction of the arrow, the material would be drawn out at *S* and carried away as needed. With a wide-mouthed hopper like this, a great deal of pressure is continually being exerted by the column of material above the belt, and this pressure varies according to the quantity of material in the hopper. Conveyors for this sort of material are often made concave and lie on three rollers, in which case no guards are required, as the concave form keeps the material from falling off.

In Fig. 2, the example shown at *K* is a pyramidal hopper *L* containing a granular material *M* which is to be removed, carried upward, and discharged at point *P*, intermittently. A plain belt conveyor is used, and on this are fastened at equal spaces, the clips *O* which hold the material and prevent its rolling down the incline. The guards on each side at *N* lie close to the cross strips and have leather or rubber ends which prevent loss of material. This type of hopper is useful when granular materials are to be fed in approximately uniform quantities and carried from one level to another. The example illustrated was used to remove bulk candy and transfer it to a higher level, where it was spread out into distributing chutes.

Valve Arrangements in Connection with Hoppers

The example shown at *Q* is quite different in its general form, although the material is held in a hopper *R* of the ordinary form. The lower part of the hopper is narrowed so that the material passes down through it in the form of a rectangular column. A rotating valve *T* having six openings of equal size is located as shown, and one portion of the hopper *U* extends down around the valve. When in the position shown, the material fills the compartment shown uppermost and the guard *U* prevents the previously filled compartment from emptying until it is nearly upside down. The buckets *V* pass along under the valve, and a given quantity of the material is emptied into each bucket as it goes by. The movement of the buckets may be regular or intermittent, and the rotation of the valve can be easily controlled by means of projecting arms on the buckets, as shown in the side view at *W*. These arms can be made adjustable and placed so that they will strike a spider *X* and carry it around a given distance as they move along. In designing devices of this kind, it is a good plan to make the length of the arms adjustable and the positions of the striking portions on the buckets also adjustable, in order to compensate for slight variations in movement.

Another form of valve arrangement which is independent of the movement of the buckets, but is timed to suit their progress, is shown in Fig. 3. The usual form of hopper *A* carries the material *B* in the pyramidal portion, but the lower part is rectangular and quite long, being so proportioned that its contents will fill one of the buckets *N*. The valves *C* and *D* lie in guides at the top and bottom of the rectangular portion of the hopper. In the upper valve, there is an opening *E*, and in the lower an opening *F*, the two openings being so placed that when one is in line with the hopper the other is closed. The arm *G*, pivoted at *K*, connects the valves by sliding joints at *H*. Lever *L* connects with rod *M*, which pivots on block *O* in slotted disk *P*. A reciprocating movement is transmitted to lever *L*, as the disk revolves.

It depends on the kind of material that is being handled as to whether a small amount of leakage is permissible or not, but in normal cases the slide valves can be made of cast iron or brass working in guides of steel. Careful fitting is not usually required on this kind of work, but the guides should always be long enough to permit a free sliding movement and good alignment.

Rotary Hopper Valves

In the example shown in Fig. 4, a continuous rotary feeding device is shown. The hopper *O* and the valve *P* are similar to that shown at *Q* in Fig. 2, but the operation is by means of a ratchet gear *R* mounted as shown. The arm *T* has a pawl on it at *S* so arranged that it engages with ratchet *R*. The disk *X* is slotted at *W*, and the block *V* is adjustable in the slot to control the movement of lever *T* through the connecting-rod *U*, as in a preceding example. The disk is driven by a chain from the sprocket *Y*, and the buckets *Q* are controlled in their movement by suitable gears or sprockets and chain running from the same shaft. When two separate units are to be timed accurately, a chain drive or gearing should always be used.

Fig. 5 shows a form of rotating hopper valve which may occasionally be found useful when quantities are to be measured and deposited accurately in buckets or other receptacles. The hopper *A* contains the material *B* which flows downward until it enters the section *H* of the rotary valve. There are six chambers *H* arranged radially about a center on which the valve rotates. The entire valve mech-

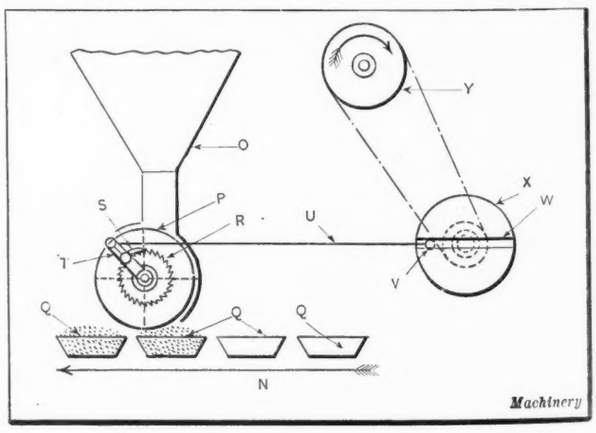

Fig. 4. Continuous Rotary Feeding Devices

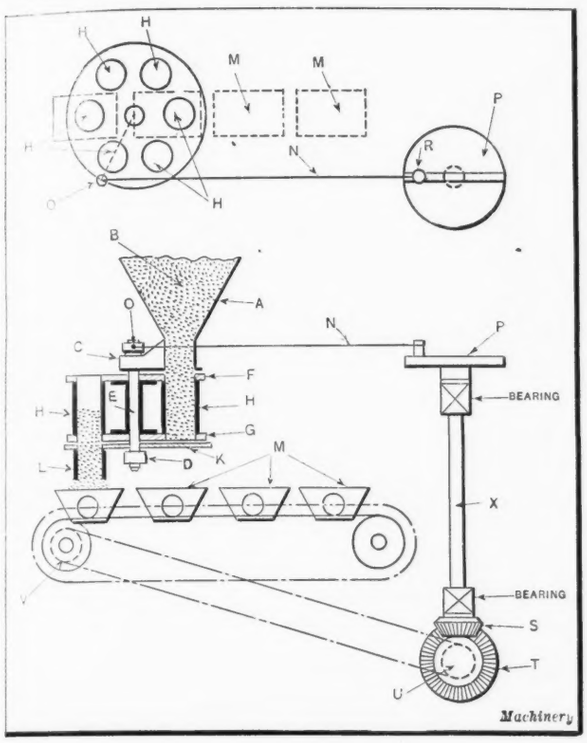

Fig. 5. Rotating Hopper Valve Mechanism

anism is supported by brackets *C* and *D* arranged according to the general design of the mechanism. The valve plate *F* fits closely against the under side of the hopper, and in each compartment there is a hole leading directly into the throat of the hopper. The plate *G* also has a series of corresponding holes, but there is only one opening in plate *K* from which the chute *L* leads. As the buckets *M* pass under the spout *L* the indexing mechanism operates at the proper point and discharges the contents of one of the compartments into the buckets, as indicated. If small quantities only are delivered and if the conveyor movement is proportioned properly, the materials can be dumped without stopping the conveyor, but for larger quantities it may be necessary to use intermittent gears or some other convenient method to stop the movement for a moment when the valve *L* is open.

The operating mechanism of this device is very similar to one previously described, the lever *O* being attached to a pawl working on a ratchet gear, the movement of which is controlled by the rod *N* which pivots in block *R*. The disk *P* has a slot in which the block may be adjusted to govern the movement of the pawl. By driving shaft *X* from the bevel gear *S* by means of the ring gear *T*, the "take off" for the conveyor comes from the same shaft through sprockets *U* and *V* connected by a chain. Naturally, the location of the various driving units is dependent largely upon the general design of the machine and the other portions of the mechanism which must be driven. It is, of course, essential that all units which must function in a certain relation to each other must be controlled from a single shaft. When accurate timing is not necessary, intermediate gears and lever movements can sometimes be used to simplify the design.

Hoppers for Liquids

So far we have considered only the hoppers used for materials that flow readily by their own weight, and as liquids of thin consistency are led through the hoppers in much the same manner, we will consider the problems arising in their handling. Although granular substances and liquids will both flow readily, there is considerable difference in the valve arrangements. In granular substances, a small amount of leakage around the valve is not serious, but when liquids are handled, more attention must be paid to this feature Several points of importance should be noted:

1. The nature of the liquid, its value and its consistency are matters that affect the design of the valve mechanism. Waste and cleanliness do not go together; if you were to see any machine handling liquids which were dripping all over it, you would not think the machine thoroughly efficient. It is not a good plan to allow surplus material to run down or overflow into a tank or tray arranged to carry it off, unless for one reason or another the liquid must be flooded over the receptacle. Conditions of this kind are sometimes found in the making of molded products in order to be sure that the molds are thoroughly filled. A thin liquid will flow readily through a valve which can be shut off by suitable mechanism without difficulty, but a heavier fluid may drip all over the machine and the receptacles unless a suitable valve is used.

2. The distribution of the product into containers affects the design of the valve. Measuring valves are most commonly used for controlling the flow of liquid. When the valve opening is very small, the pressure of the outside air may be sufficient to prevent the liquid from flowing unless a "vent" is provided. It is usually necessary to provide some means also for controlling the drip from the spout so that it will not be wasted.

Valves Used for Hoppers for Thin Liquids

Fig. 6 shows several forms of valves used for thin liquids. Some of these are good, while others are objectionable. At *A* the hopper *C* is of angular form. A point of importance is the variable pressures caused by small or large quantities of liquid in the hopper. The method of supply makes considerable difference in the design of the hopper, and it is quite common to find a cylindrical form used with a conical bottom leading to another cylindrical portion as shown at *E*. If the liquid is poured into the hopper from time to time, the pressure on the valve is variable, but if it flows into the hopper through a supply pipe, a float valve can be easily applied which will shut off and open the pipe as the liquid falls or rises in the container. By this means the pressure can be kept nearly uniform, and better results can be ob-

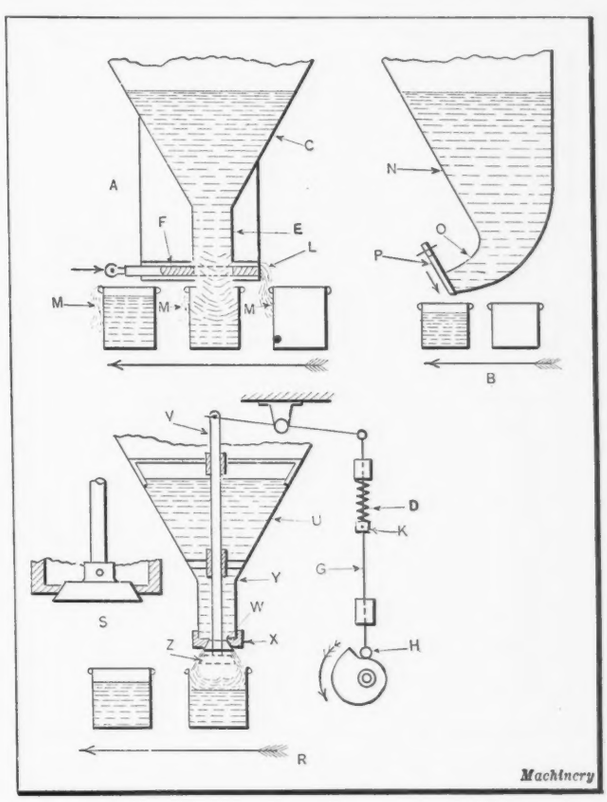

Fig. 6. Containers and Valves designed for Thin Liquids

tained. The type of valve shown in this example is unsuitable for use in handling liquid. The valve *F* slides backward and forward through guides of similar form to those used in handling granular substances, but it is almost impossible to make a mechanism of this kind tight, and the liquids will drip out at *L* and run down over the sides of the containers below. If the fluid is sticky, it may cling to the outside, as shown at *M*. If not, it will run down the sides and get all over the machine. In cases where the ends of the valve are covered, material is likely to collect there and cause trouble in cleaning.

The form shown at *B* is considerably better, as the hopper *N* terminates in a spout *O*, and the fluid is held back by a hinged shut-off valve *P* which fits tightly against the face of the opening. As this valve is operated it cuts off the supply in such a way that there is only a small amount of drip. This can be caught without difficulty by the containers, and although a few drops may remain with the heavier variety of liquids, those that are thin will not drip to any great extent. This form of shut-off valve is very frequently used and is recommended for its simplicity.

A form that is adapted to a variety of uses is shown at *R* in the same illustration. The hopper *U* contains a liquid which flows in the lower part and against the valve *W* which prevents it from passing through until the valve is opened. The valve seat *X* is fastened to the lower part of the hopper, and the angular surface of the valve keeps it tight. The rod *V* is guided as shown, and is connected by a sliding joint to an operating rod. This is pivoted in a bracket which may be attached in some convenient way, depending upon the design of the machine. The connecting-rod *G* has a roller *H* at the lower end which contacts with the cam shown. The roller is kept in contact with the cam by the spring *D* which thrusts against the collar *K* on the shaft. As the cam revolves in the direction shown by the arrow, the valve is opened and the liquid flows down over the conical portion *Z* and into the container. The spring *D* closes the valve quickly when the roller drops off the cam, but the spring must be fairly stiff in order to make a tight joint. The enlarged detail at *S* shows the construction of the valve seat and the valve. The conical surface should be made as narrow as possible, as it is easier to keep it properly fitted if this is the case.

When any sort of liquid is to be handled through a valve, it is very important that the construction permit quick and easy removal of the units for the purpose of cleaning. This point is of great importance when handling any sort of food product or any liquid that has a corrosive action on the metal. The selection of metals used in valve construction is also an important factor in the design. The writer recalls a case when a certain food product was handled through a hopper, and it was necessary to make all the parts of tin in order to avoid corrosion from the acid in the product. With the comparatively recent development of stainless steel, the problem is somewhat simplified, and this material can often be used in valve work.

Experiments will usually show the effect of a fluid on a certain kind of material, but it is important to have all conditions that will obtain in using the machine fulfilled when making the test. Rubber is sometimes used for valves, and in such cases replacements should be made as easy as possible, because frequent renewals are necessary. A designer who does not consider such points as these fails in the essentials of good design. When a great amount of labor is necessary in replacing a certain part subject to wear, or when cleaning the machine after the day's work, this labor is just so much lost time that might have been avoided by greater forethought in designing.

* * *

Obsolete machine tools impair, exhaust, sap, undermine, and destroy profits; they ravage, filch, pilfer, and steal profits; they throttle, ham-string, choke, cut off, and kill profits.—*Ernest F. DuBrul*

MAKING SMALL GEARS ON A DRILL PRESS

By JAMES H. BEEBEE

One of the most interesting jobs the writer has ever seen done on a drill press was the making of three small gears having 36, 33, and 29 teeth, respectively. A small sensitive drill was used, the arm of which swung on the upright. At the end of this arm was a plate which could be revolved. The first problem was to provide an accurate means of indexing the work for cutting the teeth. This was accomplished in the following manner: First thirty-seven evenly spaced holes were drilled in a strip of brass 3/32 inch thick by 1/2 inch wide by 8 inches long. The block shown in the illustration was used as a jig for drilling the holes in the brass strip. One end of the strip was placed in the slot in the jig and a hole drilled. The strip was then moved along and a pin passed through the second hole in the jig and through the hole in the brass strip, after which a second hole was drilled, and so on until thirty-seven equally spaced holes had been drilled.

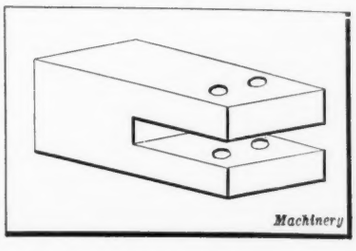

Jig used in drilling evenly Spaced Holes in Brass Strip

The ends of the brass strip were then cut off and beveled so that the center of the thirty-seventh hole and the center of the first hole coincided when the strip was bent to form a ring. This ring was next located centrally on a plate mounted on a shaft which fitted the hole at the end of the drill press arm. The ring was secured to the plate by soft solder, forming an index-plate. A spring clamped to the press upright, with a lug at one end which was a tight fit for the holes in the ring, served as an index-pin. A hole was then drilled through the plate, using a very short drill to prevent springing at the point, after which it was indexed so that the lug would engage the next hole, and a second hole drilled through the plate. This operation was repeated until thirty-six evenly spaced holes had been drilled.

After drilling, the ring formed by the brass strip was removed from the plate and cut and rebrazed so that it contained only thirty-three evenly spaced holes. The indexing device was again used in the same manner as described, for drilling the thirty-three evenly spaced holes in the plate, which were located on a shorter radius than the thirty-six holes previously drilled. When this operation was completed, the brass strip was again cut and rebrazed for use in drilling the 29-hole indexing circle in the plate. The index-plate thus formed was attached to one end of a shaft and a gear blank secured to the other end of the shaft. Then the shaft was clamped to a block of wood in such a manner that it could be revolved in the proper position below and at the side of the drill spindle.

A pin, passing through a hole in the index-plate into a hole in the wood block, was used to hold the work in place after each indexing movement. The wood block on which the index-plate and gear-cutter were mounted was fed toward a revolving gear-cutter mounted on the drill spindle in order to cut the first tooth space. After the first tooth space had been cut, the block and work were withdrawn and the work indexed by means of the index-plate, the operation being repeated until all the tooth spaces had been cut in the gear blank.

* * *

During 1923, turbines and water-wheels having a capacity of 250,000 horsepower were installed in Canada, bringing the total installed capacity of hydraulic plants in that country to nearly 3,250,000 horsepower. The present recorded water power resources of the Dominion of Canada will permit hydraulic installations of 41,700,000 horsepower.

CUTTING A LARGE ACCURATE GEAR

In thinking of parts machined to size within a few thousandths of an inch, the average person immediately pictures parts of comparatively small dimensions. Yet parts of mammoth size are today produced within such tolerances. An example of this kind is presented in the accompanying illustration. The spur gear shown, which is of the Maag type, 24 feet in diameter, and with 288 teeth of 1 diametral pitch, was recently cut at the Niles Tool Works, Hamilton, Ohio, with a maximum error between any two teeth of only 0.002 inch.

The illustration shows the completed gear set up on the table of the gear-cutting machine with its pinion in mesh for testing. The machine is of the Maag generating type and employs straight-sided rack cutters which conform to the basic rack of the involute. It will be seen that there are three teeth in this particular cutter, so that three cuts are taken at each stroke of the ram. Owing to the size of the casting, it was necessary to hold it on special supports. The casting is semi-steel, weighs about 19,000 pounds, and approximately 139 hours were required to cut the teeth. The machine was built by the Niles Tool Works for generating gears up to 40 feet in diameter.

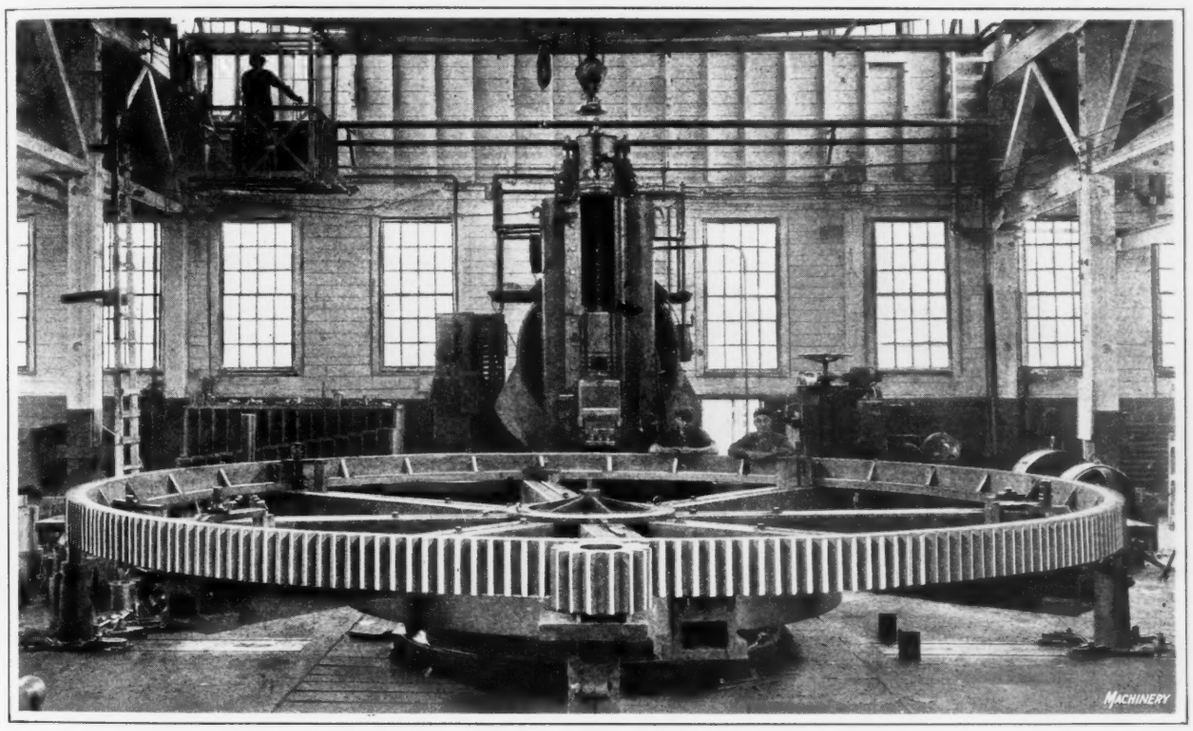

Maag Spur Gear 24 Feet in Diameter generated with a Maximum Error of only 0 002 Inch between Any Two Teeth

* * *

REPORT ON STORAGE OF COAL

The Storage of Coal Committee of the American Engineering Council has rendered a report in which it advocates the purchasing of coal on a constant monthly delivery basis, as this policy will bring about a more uniform demand for coal, which will aid in producing more satisfactory conditions both in coal mining and in transportation. It would also prevent coal shortages, and reduce transportation costs. The report states that were transportation facilities developed so as fully to meet the peak demands resulting from the prevailing unsystematic practice in coal buying and shipment, an additional investment of $12,000,000,000 would be required—an investment that is not justified if more systematic methods are used in the buying and storing of coal. A great deal of study and thought has evidently been given to the preparation of this report. It is obtainable from the American Engineering Council, 29 W. 39th St., New York City.

BORING LARGE WORK IN THE LATHE

By W. L. TRILL

Some years ago the writer went to work for a concern that had become interested in building a small gasoline engine. After the patterns were all made for a two-cylinder, two-cycle gas engine, they were sent to a stove foundry in which the company was concerned. As core work was not very well understood in this foundry, considerable difficulty was experienced in obtaining a perfect casting. While waiting for the castings, the question arose as to how the cylinders were to be bored, the only machine tools available being one small engine lathe, a drill press, shaper, and one 36- or 40-inch engine lathe which lacked about one inch of being large enough to swing the cylinders on the faceplate.

The superintendent decided to have the boring done by another concern, and instructed the writer to forget about this part of the job. However, after the first perfect casting had been planed, the superintendent changed his mind about the boring job and gave instructions that the ways of the 40-inch engine lathe be chiselled or chipped out for a depth of about 1 inch so that the cylinders could be bored by mounting the work on the faceplate.

When the superintendent left the shop about 10:30, as was his custom, the writer and his helpers immediately got busy. First the faceplate was removed from the spindle and bolted to the carriage just back of the position ordinarily occupied by the tool-holder which had been removed. The faceplate was squared up, using a wire indicator fastened to a shaft held between the lathe centers. The cylinder casting was then bolted to the faceplate and the boring operation commenced, the boring-bar being held between the lathe centers. When the superintendent got back at about 2 P. M., the first cut had reached a depth of about 1 inch. As the iron was very soft, the tool was rolling out some very nice chips. When the superintendent asked what we were doing, the writer said, "You wanted those cylinders bored out on the faceplate didn't you?" Not answering the writer, the superintendent went into his office as he appeared to have business there just at that time. By this method, straight as well as parallel holes were bored in the casting—something which could not have been done had we followed the instructions of the superintendent.

Unusual Engine Lathe Operations

Prize-winning Articles in MACHINERY's Contest on Interesting Lathe Practice—Third Installment

BROACHING RECTANGULAR SLOTS IN THE LATHE

By WILL C. JOHNSON, Machine Instructor
Elm Vocational School, Buffalo, N. Y.

About 1000 malleable castings like the ones shown at *A* and *B*, Fig. 1, were to be machined at the Elm Vocational School, Buffalo, N. Y., for use in making board clamps for

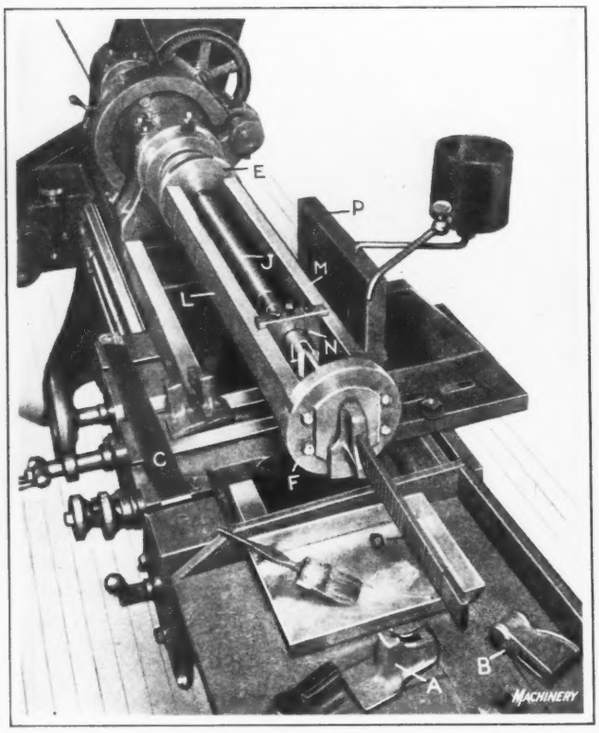

Fig. 1. Lathe equipped for broaching Rectangular Slots

the work-benches of the manual training department. The most difficult problem in making these pieces was the machining of the ⅜- by 1¾-inch rectangular slots. From 0.030 to 0.050 inch of material was left in these holes or slots for finishing. The students were set to work filing these slots to size before the lathe shown in Figs. 1 and 2 was fitted up for broaching the holes, in order to impress on their minds the great saving in effort made possible by the use of a properly designed power-driven tool.

The broaches shown at *C* and *D*, Fig. 1, were made of Jessop's No. 1 annealed carbon tool steel, and were shaped, hardened, tempered, and surface-ground in the school shop. All the material used in constructing the broaching fixture was found among the used materials in the shop store-room. The end plates *E* and *F*, Fig. 2, were made from discarded chuck back-plate castings, as were also the driving plates shown at *G*. An old automobile thrust bearing *H* was employed to take the thrust imposed on the fixture. The draw-bar *J* was made from an alloy steel driving axle, turned down to a diameter of 1¾ inches and threaded with a four-pitch Acme thread. The bronze bushing at *K* was threaded to fit the thread on the draw-bar. The flange of this bushing was securely clamped between the two halves of the driving plate *G*, so that when the lathe spindle was revolved, bar *J* would draw the broach *D* through the work. The two 1- by 4-inch cold-rolled steel pieces *L* and *M*, Fig. 1, were accurately milled to length and used to form a frame for the fixture. These plates were secured to the end plates *E* and *F* by ⅝-inch standard hexagonal-head cap-screws. A rectangular cast-iron sliding block *N* was fitted between the pieces *L* and *M* to serve as a guide for the draw-bar and broach and also to prevent the latter from turning. The fixture was bolted to an angle-plate *P* secured to the lathe carriage.

A large pulley was mounted on the lineshaft and belted up to the lathe in such a manner that it could be used to drive the lathe on the return movement of the bar *J* at a speed about three times as fast as that used on the working stroke. In shops where small quantities of small parts are occasionally required to be broached, a fixture of the kind described will prove as satisfactory as a regular broaching machine, and can be made at less cost.

* * *

TURNING LONG SLENDER WORK

By F. H. MAYOH

How would you handle the job of turning a piece of bar stock about 8 inches long and 3/16 inch in diameter to a diameter of 0.080 inch, or the job of turning a piece about

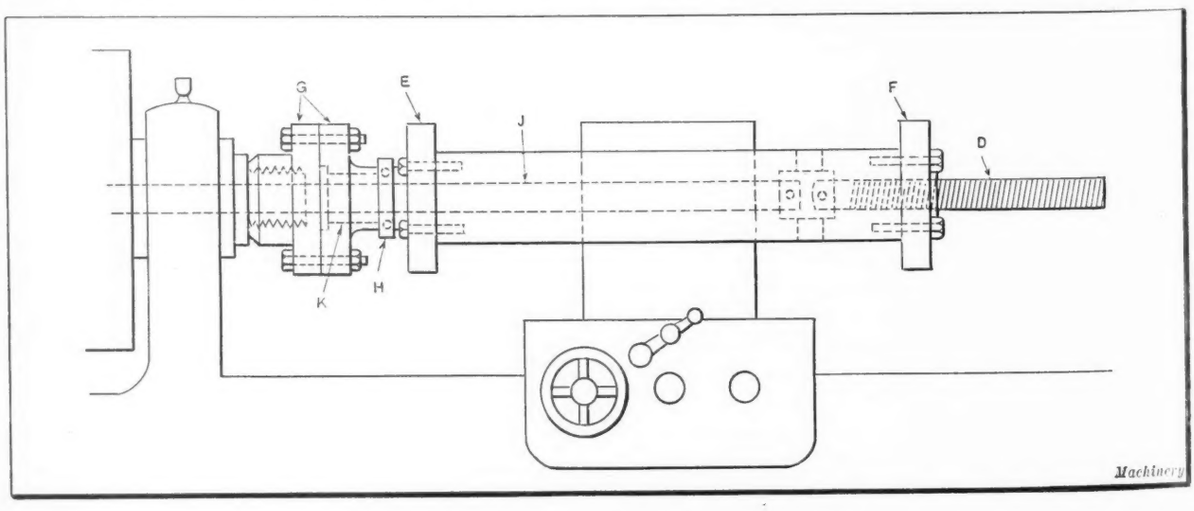

Fig. 2. Diagrammatic Lay-out of Lathe Equipment shown in Fig. 1

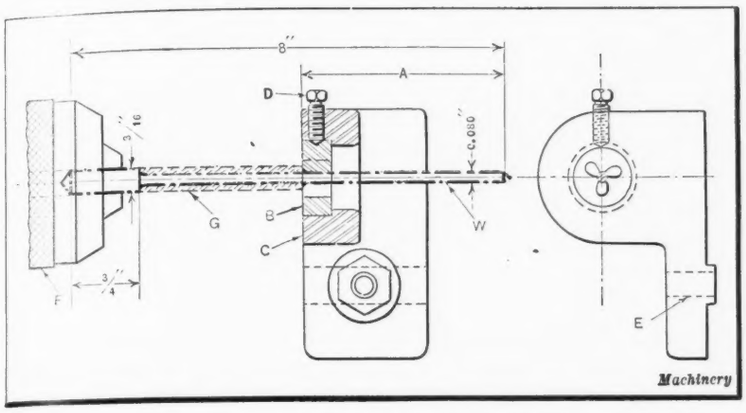

Fig. 1. Turning Die for Long Slender Work

1 inch in diameter by 3 feet long? The accompanying illustrations show the tools and set-ups that were used for this interesting work. Figs. 1, 2, and 3 show set-ups for machining the piece shown by heavy dot-and-dash lines at *W*, Fig. 1. The section having the small diameter (0.080 inch) is shown turned to size for a distance *A*. The part that still remains to be turned off is indicated by the dotted section lines at *G*. That part of the work having a diameter of 0.080 inch is turned by a die *B* held in the holder *C*. This die is similar in construction to a thread-cutting die, except that no threads are cut on the lands.

The holder *C* in which the turning die *B* is held by screw *D* is attached to the cross-slide of the lathe in place of the toolpost by a T-bolt passing through hole *E*. The work *W*, which is a piece of drill rod, is held and revolved by the drill chuck *F*. The cross-slide of the lathe is carefully adjusted until the hole in the turning die is central with the chuck, in which position the turning is done by feeding the carriage toward the headstock in the usual manner. Thus the die turns down the 3/16-inch stock to a diameter of 0.080 inch for the full length of the piece except the ¾-inch length held in the chuck. Oil is allowed to flow into the cutting die while performing the turning operation so that a bright, smooth finish is obtained. When turning the short section having a diameter of 3/16 inch, the work is set up as shown in Fig. 2, using what is known as a tailstock rest, which is shown in Fig. 3.

The work *W*, Fig. 2, is supported between centers *B* and *C*. Center *C* is cut away at *D* to provide clearance for the cutter *E*. The supporting jaw *F* of the tailstock rest is adjusted so that it bears against the small part of the work. This jaw is set at an angle of 45 degrees, as shown in Fig. 3, so that it will effectively take the thrust of the turning cut.

In Fig. 2, the same letters indicate the same parts as in Fig. 3. Jaw *F* is adjustably mounted in a cast-iron holder *G*, Fig. 3, provided with a screw *H* for adjusting and backing up the jaw. The screw *I*, passing through an elongated slot in the jaw, securely holds the latter part in place after the desired adjustment is obtained. The body *G* of the tailstock rest is mounted on the spindle *K* of the tailstock, being clamped to it by a bolt which passes through hole *L*. The part of the rest through which hole *L* is bored is split at *M* so that it can be clamped to the spindle. This arrangement allows the entire rest to be swung about the tailstock center until the vee in jaw *F* is in the proper position to receive the cutting thrust.

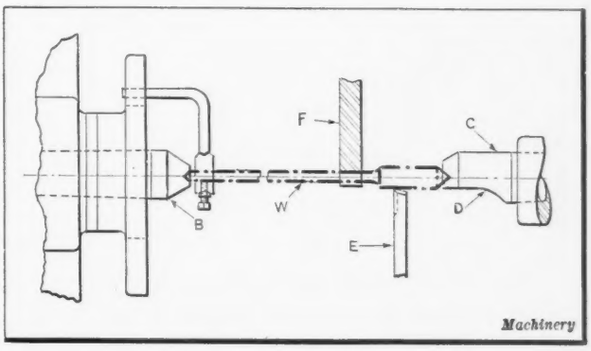

Fig. 2. Method of finishing Large End of Work shown in Fig. 1

The turning cutter *E* is held in a block *P* and is clamped in place by plate *Q* and screw *R* in the toolpost *S* which is machined to fit the cross-slide of the lathe. This type of rest is satisfactory for turning short lengths to a very small diameter, and when used in conjunction with the die shown

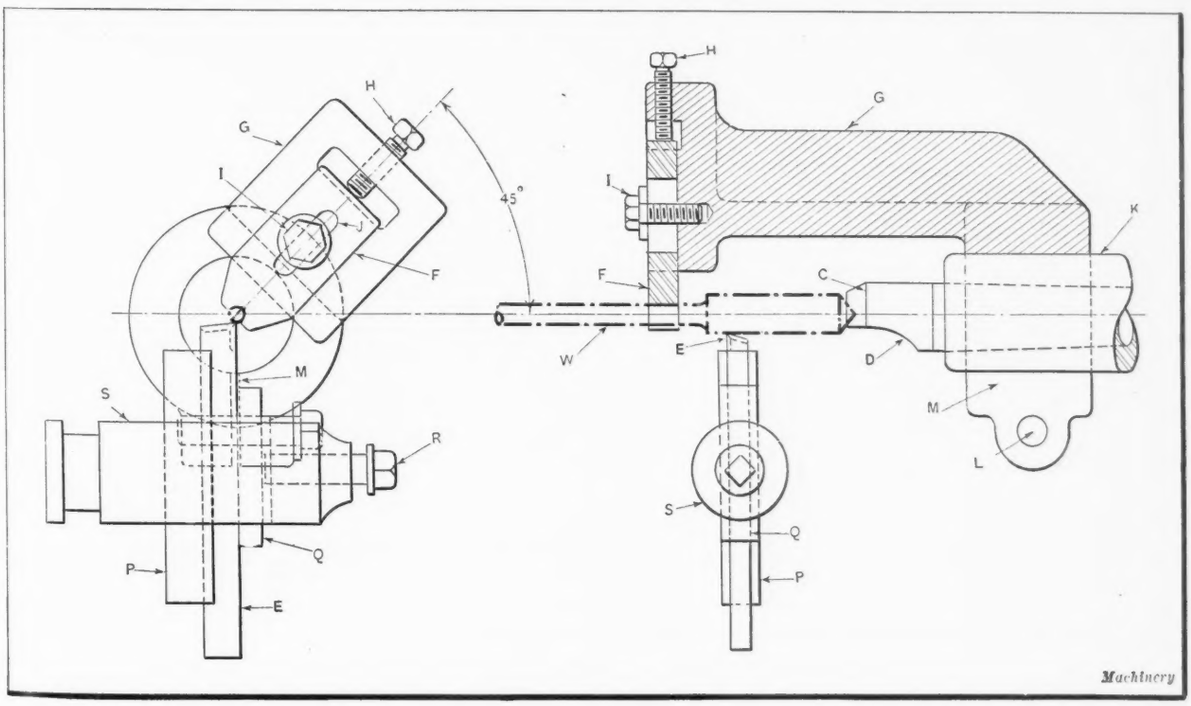

Fig. 3. Complete Tailstock Rest used in Set-up shown in Fig. 2

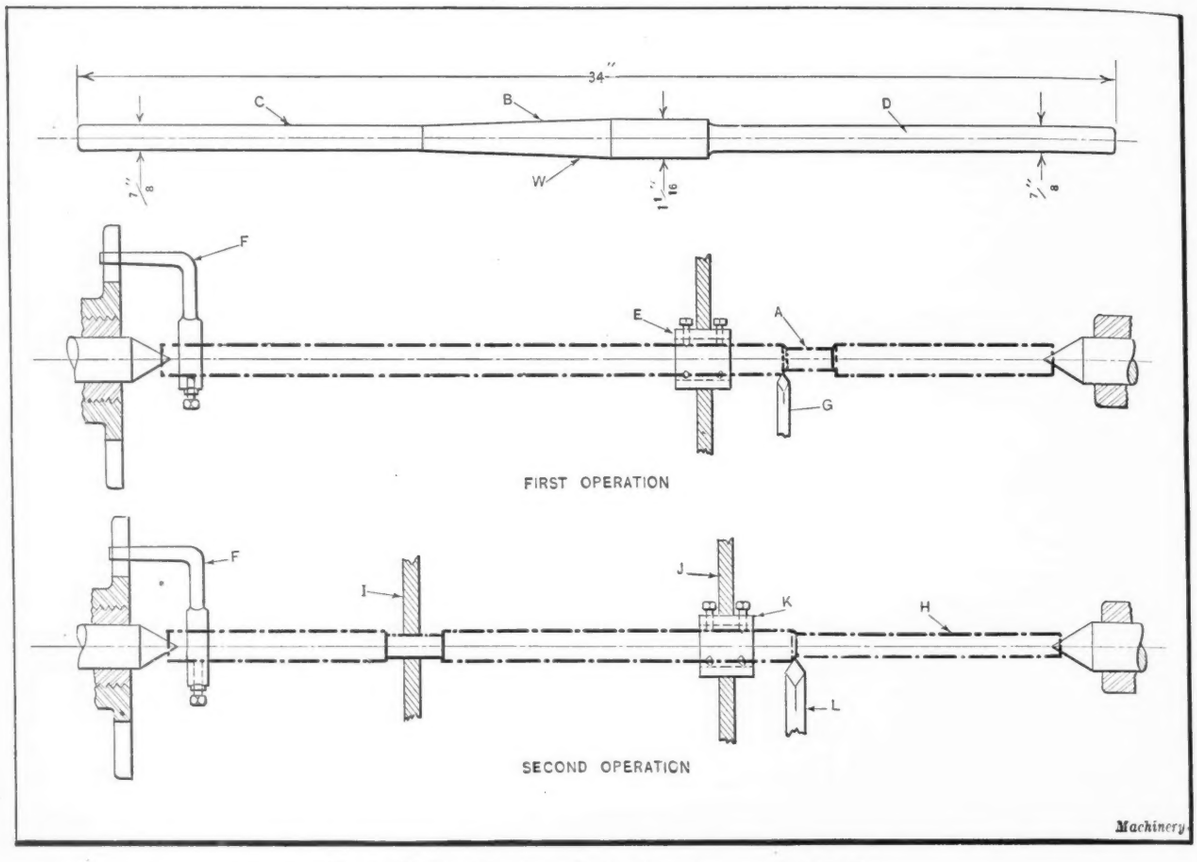

Fig. 4. Diagrams illustrating Turning Operations on a Staybolt Tap

in Fig. 1 leaves nothing to be desired in the quality of the work, which is handled at a speed that compares favorably with the general run of lathe work.

Turning the Blank for a Long Slender Staybolt Tap

Were one to attempt to turn the piece *W*, shown in the upper part of Fig. 4, and not proceed in just the right manner, inaccurate work would be the result. It may be well to mention here that this piece of work, when completed, is a staybolt tap. The section of the work having a diameter of 1 1/16 inches is the full-size threaded part of the tap, the section *B* is the tapered part, the section *C* the pilot that guides the tap, while the section *D* is the shank. The diameter of 1 1/16 inches, together with the relatively long length of 34 inches, makes this job one that presents unusual difficulties, and necessitates the use of two steady-rests to support the work during all the turning operations except the first, which is a preparatory operation. The first operation consists of turning a short bearing surface for the jaws of the back-rest shown in Fig. 6, which is used in subsequent operations.

A thimble *E*, Fig. 6, having three screws in each end is slipped over the work *W*. The spindle of the lathe is then revolved, and the six screws, two of which are shown at *F* and *G* are adjusted until the thimble or bushing *E* runs true, the adjusting of the bushing being done with the steadyrest removed from the machine. With the eye-bolt *I* of the steadyrest swung to the left, the swinging part of the rest *J* carrying the jaw *K* is swung on stud *L*, thus opening the jaws of the rest so that it can be closed over the thimble *E* in the position shown. All three jaws *M*, *N*, and *K* are then adjusted to bear evenly on the thimble by means of

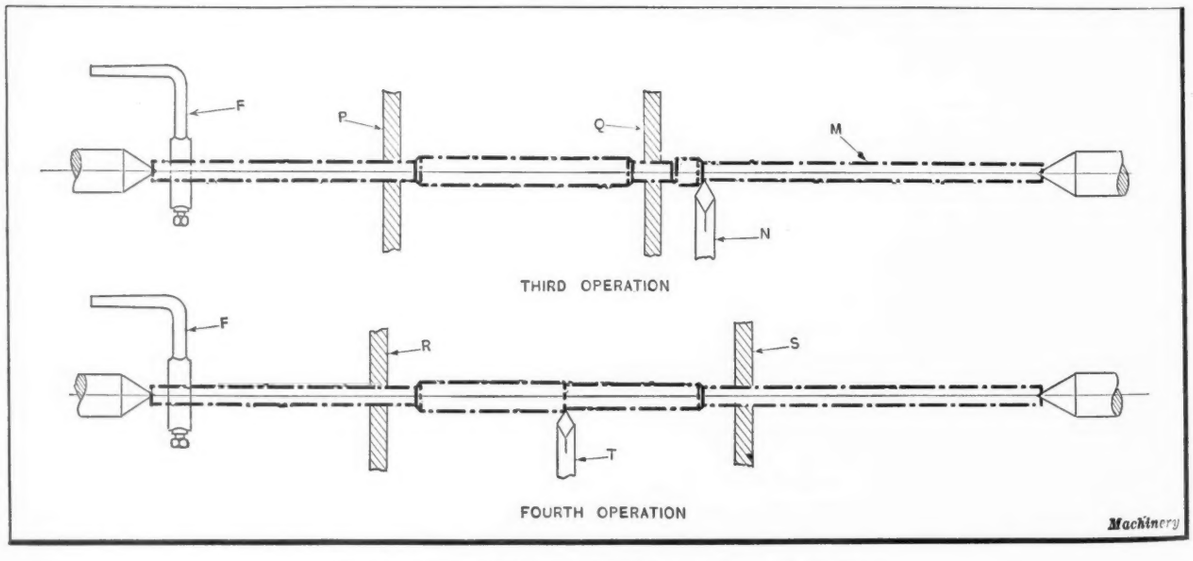

Fig. 5. Set-ups for Third and Fourth Operations on Staybolt Tap

the screws *P*, after which the jaws are locked in place by screws *Q*.

The results obtained in the following operations depend on the care taken in locating and adjusting the steadyrest, as described in the preceding paragraph. Referring to Fig. 4, it will be noted that the work is supported by thimble *E* for the first turning operation at *A* between centers, the dog *F* being used to drive the work in the usual manner, while the cutting tool *G* turns the section *A*. Following this, the work is turned end for end and again placed between the lathe centers for the second operation, which consists of turning part *H*.

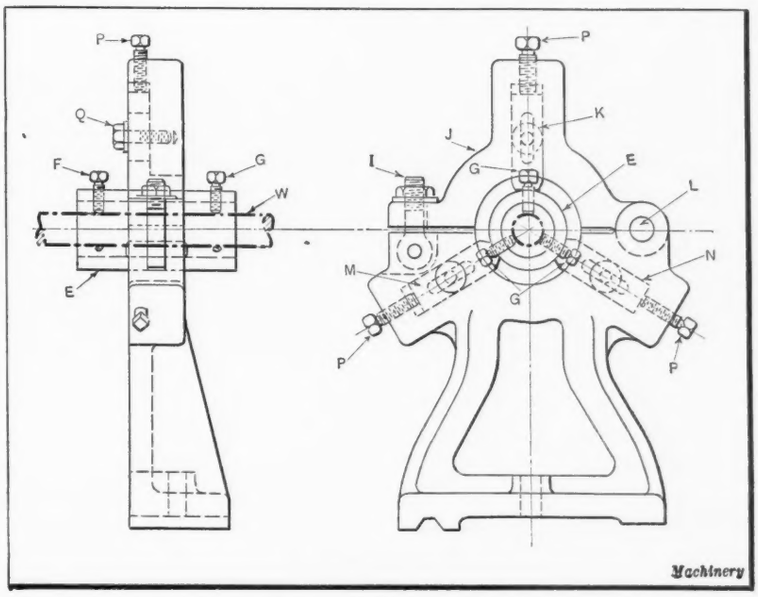

Fig. 6. Method of using Thimble-bearing for Steadyrest

During the second operation, two steadyrests are used, the jaws of one rest being indicated at *I*, and those of the other at *J*. Jaws *I* support the work on the section turned in the preceding operation. Jaws *J* of the other steadyrest support the work through the medium of thimble *K*, which is trued up and clamped to the work in the manner previously described and illustrated in Fig. 6. Next the work is again reversed between the lathe centers and supported by the two steadyrests *P* and *Q*, Fig. 5, for turning the section *M*. In this set-up, the thimble is discarded so that the jaws of both steadyrests bear directly on the portions of the shaft that have been previously turned.

In the fourth operation, the set-up is similar to that used for the third operation. This set-up is used for turning the straight and tapered center portions of the work and for the final threading operation. After the work is rough-turned in the manner described, the four turning operations are repeated for the finishing cuts, with the exception that the first operation and the use of the thimble *K* are omitted.

This article might well be termed a study in steadyrests. The rest shown in Fig. 3 is of the tailstock type, and that in Fig. 6 of the type mounted on the ways, while the one shown in Fig. 7, which is to be described, is attached to the carriage.

The type of rest shown in Fig. 7 is mounted on the carriage of the lathe, and travels with the carriage so that the work *B* is supported by a V-jaw directly back of the cutting tool. This type of rest is the one generally referred to as a follow-rest, and is used in turning tool-steel bars of any length up to the maximum capacity of the lathe. The bars, after being turned to within 2 inches of the end, or as close as possible to the dog *A*, are reversed on the lathe centers *C* and *D* so that the large end can also be turned to size. During the turning operations, oil is allowed to flow freely on the cutting tool *E*.

* * *

THE MAKING OF PAPER CUPS

In the making of the round paper drinking cups, automatic machines are used throughout. The paper is supplied in the form of a circular disk to the machine, where mechanical fingers pick one disk at a time, placing it under the punch of a press which gives the cup its shape, the sides being pleated for strength and rigidity, and also to take care of the excess amount of paper, which cannot be stretched the same as a metal sheet. The cup, now having assumed its final form with pleated sides, a curved tip, and tumbler shape, is transferred to another part of the machine where it is sterilized by heat. After sterilizing, the cup is inverted and passes on a continuously moving chain under a liquid spray of hot paraffin. The paraffin is applied only to the outside of the cup; it seals the pleats and gives increased rigidity to the cup. Next, it passes into a baking chamber, where the paraffin is drained off and partly dried. From the baking chamber, an endless conveyor carries the cups past fans, which complete the drying.

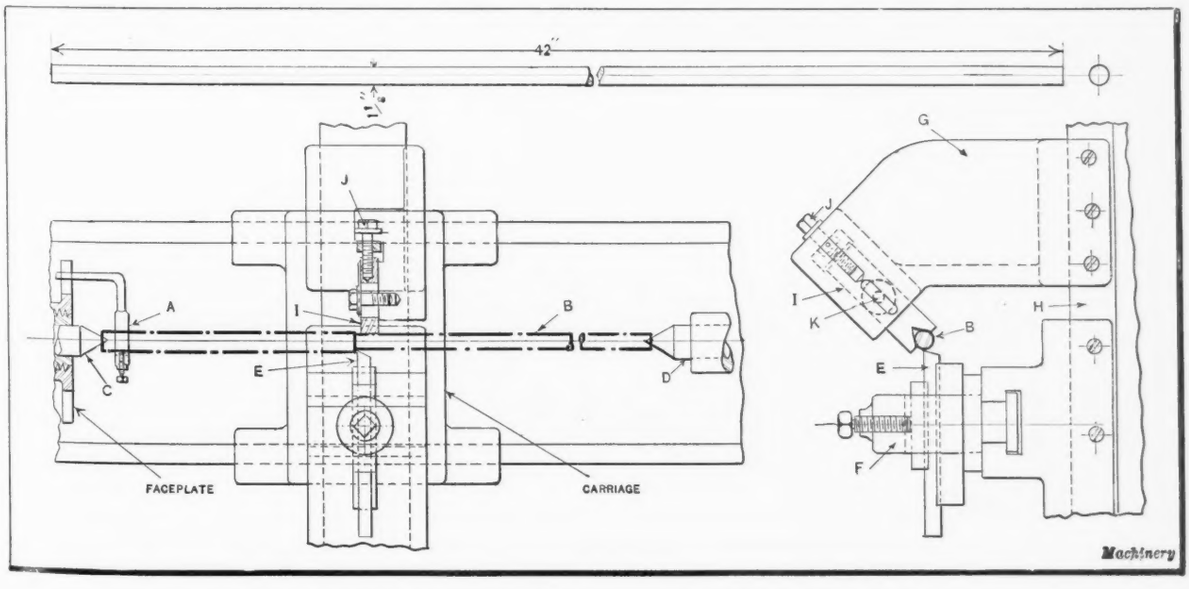

Fig. 7. Follow-rest for supporting Long Slender Work, attached to Carriage of Lathe

Examples of Heavy-duty Drilling and Boring

By HERBERT L. TIGGES, Sales Engineer, Baker Bros., Toledo, Ohio

IN handling automobile cylinder blocks, boring on vertical multiple-spindle machines is common practice when high production is required, but if the production is small, it is more economical to use a single-spindle machine. An installation of the second type may be provided with an indexing fixture in order to insure that the center distances of the bores will be accurate.

A cylinder block in which the four bores are completely finished on four-spindle cylinder boring machines is shown in Fig. 1. Three cuts are taken in each bore, the block being first rough-bored to 3.605 inches in diameter. The casting is previously milled along surfaces *A* and *B* and two locating holes *C* and *D* are drilled and reamed in the bottom. The block is chucked on surface *B*, located from the two pins, and two strap clamps are used on surfaces *E* and *F* for holding the work to the machine. The actual cutting time for the first roughing operation is slightly more than two minutes, and one operator handles two machines. The cutter-head used is of a special type with four blades set at a right-hand spiral. The block is then passed to other machines for the performance of operations other than boring.

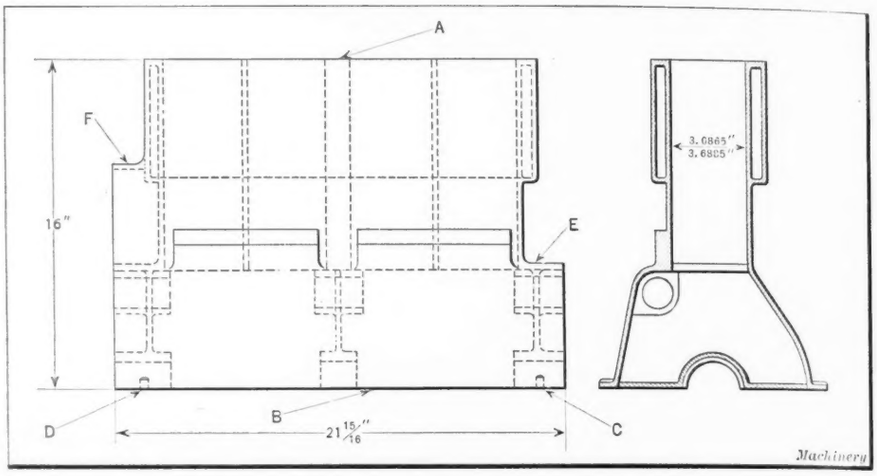

Fig. 1. Automobile Cylinder Block which is bored twice, reamed, and counterbored in Quantities on a Line-up of Four-spindle Machines

After the work of the intermediate machines has been performed, the block is next straight-bored with a single-point tool, reamed for a final finish, and then counterbored. For the first rough-boring step, the speed of the machine spindles is 60 revolutions per minute, the feed 0.060 inch per revolution, and the average production, forty-five blocks per hour. The straight-boring, reaming, and counterboring are all performed on one machine, the tools being changed to suit, and with this equipment the total floor-to-floor time required for the three steps is approximately nine minutes. Two machines are used for the rough-boring operation and seven machines for the straight-boring, reaming, and counterboring. The weight of this block is about 120 pounds.

The four bores were reamed under a four-spindle machine. This practice is followed in some plants, but in other plants it has been found desirable to ream one bore at a time on single-spindle machines. Many good arguments are advanced in favor of both methods, and the preferable finishing method depends more or less on the design of the block and the requirements in the way of final finish. There is a growing tendency to lap the bores in multiple for the final finish, and in connection with this operation a single-spindle heavy-duty drilling and boring machine is used for the reaming operation. The machine is often arranged with special gearing to give speeds of from 40 to 60 feet per minute and feeds ranging from 0.0625 to 0.3125 inch per revolution. The machine may be built with a heavy box-design supporting bracket arranged with an adjustable inner bushing to give proper support to the reamer bar. The cylinder block is moved from one bore to the next which gives one decided advantage; that is, as the same reamer is used in all bores, uniformity of size is assured. The supporting bracket eliminates chatter and results in a fine finish.

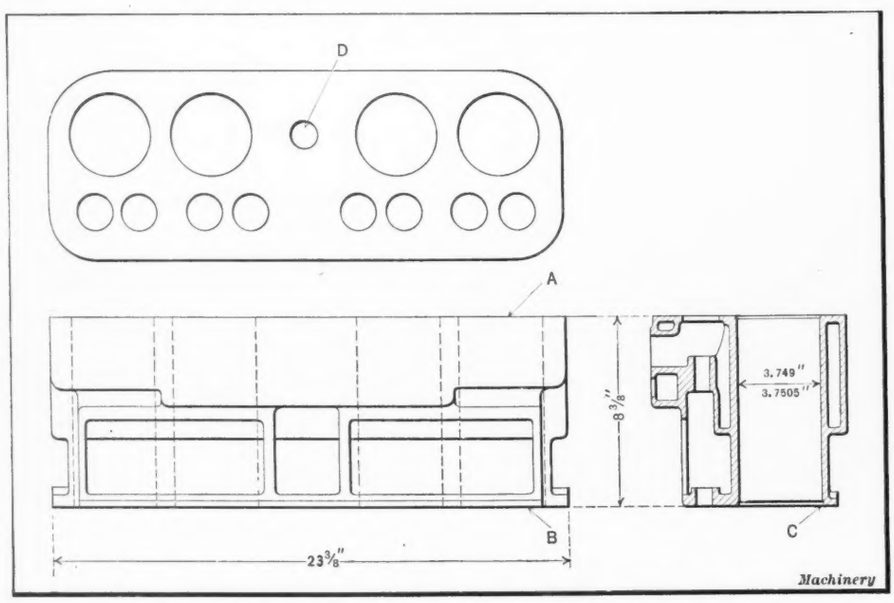

Fig. 2. Cylinder Block produced in Small Quantities on a Single-spindle Machine

The cylinder block shown in Fig. 2 is produced in small quantities in a plant where blocks of different center distances between the bores are manufactured. In this plant the machine used for the operation is of the single-spindle type, and it is equipped with an indexing fixture which facilitates the accurate maintenance of center distances between the bores. For rough-boring the cylinder illustrated, the cutter speed is 60 revolutions per minute and the feed is 0.060 inch per revolution, which is about the same as used on the block previously mentioned. On the

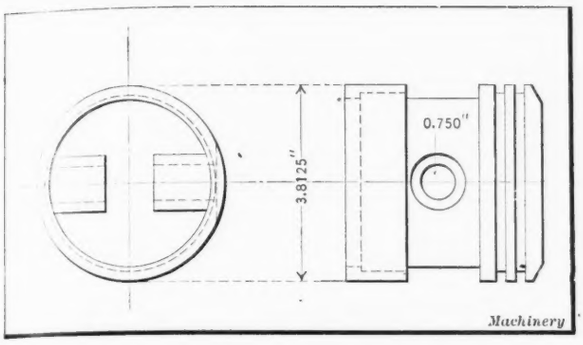

Fig. 3. Cast-iron Piston in which the Wrist-pin Holes are drilled and line-reamed

second block the production in the rough-boring operation is five to six blocks per hour. There is also a finish-boring and reaming operation handled in another set-up on the same equipment.

Operations on Pistons and Crankshafts

In Fig. 3 is shown a cast-iron piston that has the wrist-pin holes drilled and reamed under a two-spindle gang machine equipped with a continuous table, which permits of conveniently sliding the fixture from one spindle to the other. The fixture is of the tumbler type to facilitate drilling from both sides of the work. Under the first spindle the holes are drilled to 0.7187 inch in diameter at a drilling speed of 306 revolutions per minute and a feed of 0.024 inch per revolution. The work is then line-reamed under the second spindle.

Fig. 4 shows a crankshaft forging in which six holes are drilled 9/16 inch in diameter through the flange on the left-hand end. Two of these holes are reamed to 0.5005 inch diameter. Both steps are performed on a two-spindle drilling machine equipped with a six-spindle head on one spindle for the drilling operation, and a two-spindle head on the other spindle for the reaming step. No table is provided on this machine, a three-station indexing fixture which holds the forging upright being used instead. The speed of the drills is 420 revolutions per minute, and the feed 0.004 inch per revolution, while the reamer speed is 280 revolutions per minute and the feed 0.006 inch. The production of this machine per hour is sixty crankshafts.

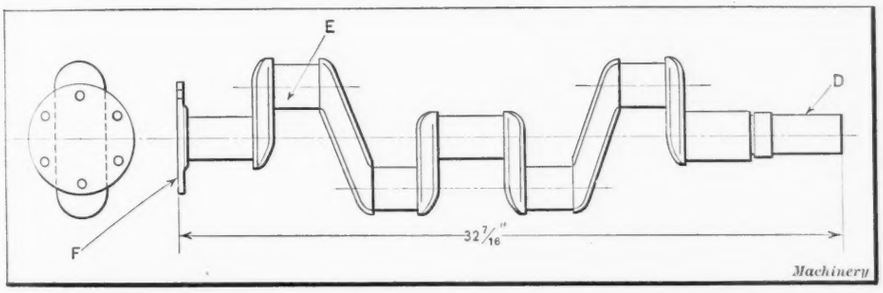

Fig. 4. Crankshaft Forging in which Six Holes are drilled through the Flange and Two reamed

Operations on Spring Seats

A malleable-iron spring seat is shown in Fig. 5 which has a large hole rough-bored and reamed to 2.875 inches within plus or minus 0.003 inch, and four small holes drilled on one side. The rough-boring and reaming of the large hole are accomplished on the double-unit machine illustrated in Fig. 6, which consists of two double-spindle machines each equipped with a three-station indexing fixture. It will be noted that the boring and reaming tools are supported rigidly in a heavy bracket attached to the lower frame of the machine.

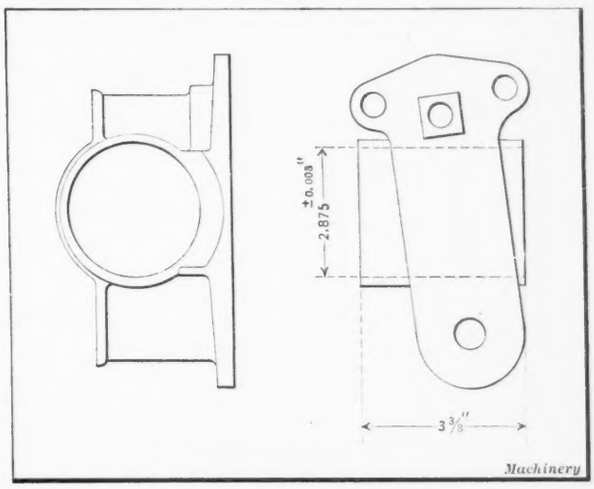

Fig. 5. Spring Seat on which Several Important Operations are performed on the Drilling Machine

The rough-boring step is done under the left-hand spindle to 2.860 inches in diameter, with a spindle speed of 92 revolutions per minute and a feed of 0.040 inch per revolution, while the reaming is done under the right-hand spindle at a speed of 62 revolutions per minute and a feed of 0.060 inch. The production obtained in this operation is fifty-five pieces per hour, and one operator handles two machines.

The second operation of drilling the four holes is also performed on a duplex machine equipped as shown in Fig. 7

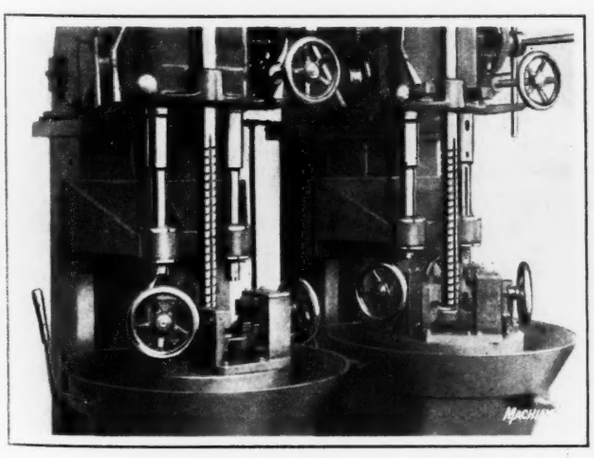

Fig. 6. Tooling provided for boring and reaming the Large Hole in the Spring Seat shown in Fig. 5

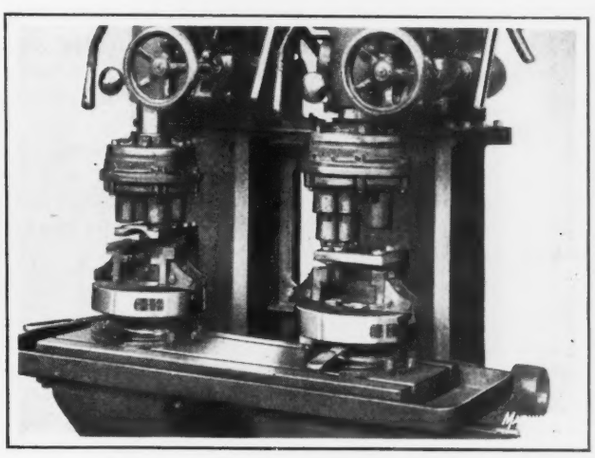

Fig. 7. Special Multiple-spindle Drill Heads and Fixtures used for producing the Four Holes in the Spring Seat

with multiple-spindle heads and special chucks. Three of the holes are 29/64 inch in diameter, and these are drilled at a speed of 611 revolutions per minute and a feed of 0.004 inch per revolution, while the remaining hole, which is 45/64 inch in diameter, is drilled at a speed of 400 revolutions per minute and a feed of 0.006 inch. The production of this double-unit machine tended by one operator is about sixty-five parts per hour. The machines referred to in this article are all of the type made by Baker Bros.

* * *

A DIFFICULT TUBE-SHAPING JOB

Brass tubing, 1¼ inches inside diameter and No. 18 gage, is used in making the handle shown at *C* in the accompanying illustration. This handle is used in oxy-acetylene welding equipment manufactured by the Harris Calorific Co., Cleveland, Ohio. Owing to the thinness of the metal and the peculiarity of the shape, it was a difficult proposition to develop a method of making this part satisfactorily in large quantities. The small holes formed at the upper end of the handle to receive tubes are only 5/16 inch inside diameter. In reducing the metal at this point, it would frequently split and spread sideways to a width greater than the original diameter of the tubing, which is not permissible. However, the problem was solved by the use of the punch press equipment shown in the illustration.

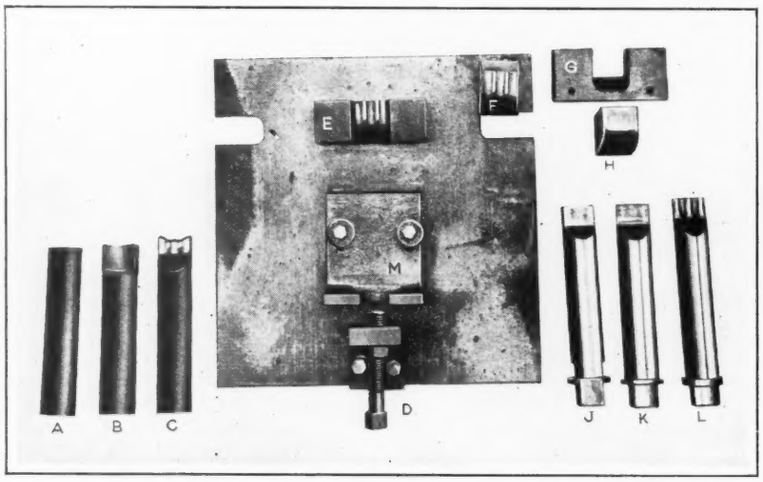

Power Press Equipment used in producing Welding Torch Handles from Brass Tubing

The unit shown at *D* is assembled on the bed of a press with a die-block *E* in place to suit the particular step to be performed, there being three steps necessary in producing the part. Punch *F* is used with block *E* for the third step, and punch *H* with the die *G* for the first step, the punch and die for the second step being similar to those for the first. It is customary to set the machine up for running a large quantity of work through one step at a time.

With the die-block *G* and punch *H* set up, arbor *J* is slipped into part *A*, the arbor being located in the die with its collar registering against the flange of piece *M*. When the ram descends, the work is formed to the shape shown at *B*. The second set of dies and arbor *K* are next used to slant the work still more. In the third and last step, arbor *L* is used with die *E* and punch *F* to bring the work to the form shown at *C*. In each case, the walls of the die-block serve to locate the punch and also to prevent the metal of the tube from spreading more than the desired amount. The collar on the work-arbors, by coming in contact with the flange of part *M*, effectively prevents the punch from pushing the work out of the die. These handles are later marked, knurled, and highly polished.

* * *

A report issued by the Department of the Interior shows that last year 318,000 tons of scrap copper, lead, zinc, tin, aluminum and nickel were recovered, and more than 515,000 tons of brass and other non-ferrous alloys, the value of the recovered scrap metal being over $200,000,000. The brass scrap was the most important item, amounting to nearly $73,000,000, with copper running second—nearly $57,000,000 worth having been reclaimed.

CUTTING EVENLY SPACED TEETH ON A CYLINDER

By ALBERT M. SARGENT

The method of cutting evenly spaced gear teeth on a cylindrical piece of work held between centers in a lathe, as described in the following, has been found to give very accurate results. The same method can, of course, be used for various kinds of cylindrical work which is required to have evenly spaced grooves or teeth cut in its periphery. Briefly, the method consists of engaging the lead-screw of the lathe, as in thread cutting, and employing the lead screw gearing as a means of indexing the lathe carriage to give the required spacing for the grooves or teeth.

The lead-screw gearing is, of course, disconnected from the lathe spindle so that the latter can be run independently of the screw-cutting mechanism when turning or cutting the grooves. The method described was used to cut 34 rack teeth at one end of a cylinder 3½ inches in diameter by 14 inches long. The rack teeth were required to mesh accurately with a pinion having 19 teeth of 12 diametral pitch. The pinion was employed for moving the cylinder lengthwise and also for holding it in any desired position in such a way that it could be revolved freely.

First the gear cover was removed from the end of a 16-inch Champion lathe, and the gear shift lever set for cutting the finest thread for which the mechanism was designed. The lead-screw was next thrown into engagement with the carriage, the same as for gear cutting. Then the idler gears were removed from the studs at the end of the lathe, and the largest of these, which happened to be a 120-tooth gear, placed on the shaft that entered the gear-box. Next a pointer made of band iron was clamped to the body of the lathe in such a manner as to point to the center of one of the gear teeth. The number of teeth to be indexed or moved in order to produce a carriage travel of exactly 10 inches was determined by trial. This method of indexing compensated, of course, for any error there might be in the lead-screw. Having determined the proper indexing movement for a carriage travel of 10 inches, it was a simple matter to calculate the number of gear teeth to be indexed past the pointer to give the lathe carriage the correct amount of travel for spacing the teeth on the cylinder.

Although it would have been possible to cut the teeth with a formed tool held in the toolpost, it was decided to rough out the tooth spaces with a parting tool ground slightly thinner than the width of the tooth space at the base or root, and then finish the sides of the teeth by taking two separate cuts with the compound rest set at the proper pressure angle. After cutting the first tooth to the proper size, as determined by a Brown & Sharpe gear tooth vernier, the remaining teeth could be easily cut to the same size.

The working surfaces of the teeth produced in this way were smooth and free from chatter marks. The lead error in 34 teeth amounted to only 0.0015 inch. Six cylinders like the one described were machined complete, including the set-up time, in twenty-two hours. The writer believes that this time will compare favorably with that required when using any other method that could be employed in a shop equipped with the ordinary types of machine tools.

Letters on Practical Subjects

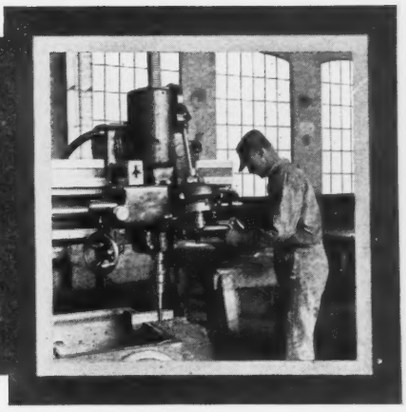

INDEXING FIXTURE FOR DRILLING AND TAPPING

The fixture shown at the left-hand side of Fig. 1 was designed to be mounted on a lathe faceplate for use in drilling and tapping steel disks like the one shown at *A*. A better idea of the details of the various parts of the fixture may be obtained from Fig. 2. The cast-iron holder *B* is located on the faceplate by means of a recess in the faceplate. Four ⅜-inch bolts are employed to secure the casting in place, the front end being recessed to receive the flange turned on the part *D*. The small or projecting end of part *D* is turned to fit the hole in the clamping ring *C*.

It will be noted that the four holes in the disk *A*, Fig. 1, are located on a circle having a diameter of 1¼ inches. The work-holding member *D* of the fixture is located in an eccentric position, or offset with respect to the center of the lathe spindle, an amount equal to one-half the diameter of this circle or ⅝ inch. Four equally spaced tapered holes are made in the flange of part *D* which are a good fit for the end of the indexing plunger *E*. The ring *C* which serves to hold member *D* in the body *B* of the fixture is turned with a slight clearance which permits the work-holding part *D* to be rotated when the plunger *E* is lifted. A segment is cut from ring *C* which is faced off so that it can be used to clamp the chuck in place after it has been indexed.

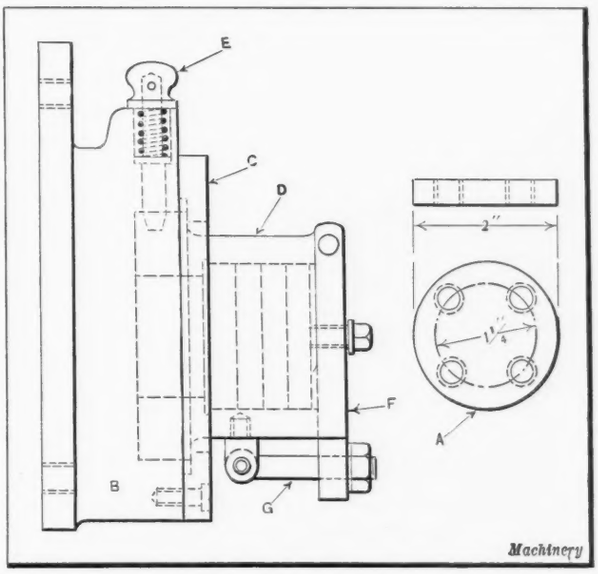

Fig. 1. Fixture employed in drilling and tapping Holes in Disk A

The work-holding member *D* is bored out deep enough to hold four disks at one time. The clamping strap *F* is held in position by an eyebolt *G*. The four large holes in the clamping strap *F* (see Fig. 2) fit hardened steel bushings that are employed to guide the drill.

When the fixture is in operation, four disks are placed in the holder and clamped down by means of the strap *F*. The bushing is next inserted in the hole in clamp *F* that is located in line with the center of the lathe spindle. A drill held in the tailstock is then used to drill the first hole. The bolt that holds the clamping segment of ring *C* is next loosened, and the work-holding member *D* revolved until the indexing pin *E* drops into the next hole. The other holes are drilled in the same manner, after which a tap held in a special holder attached to the tailstock is used for tapping the holes.

H. M. HARPER

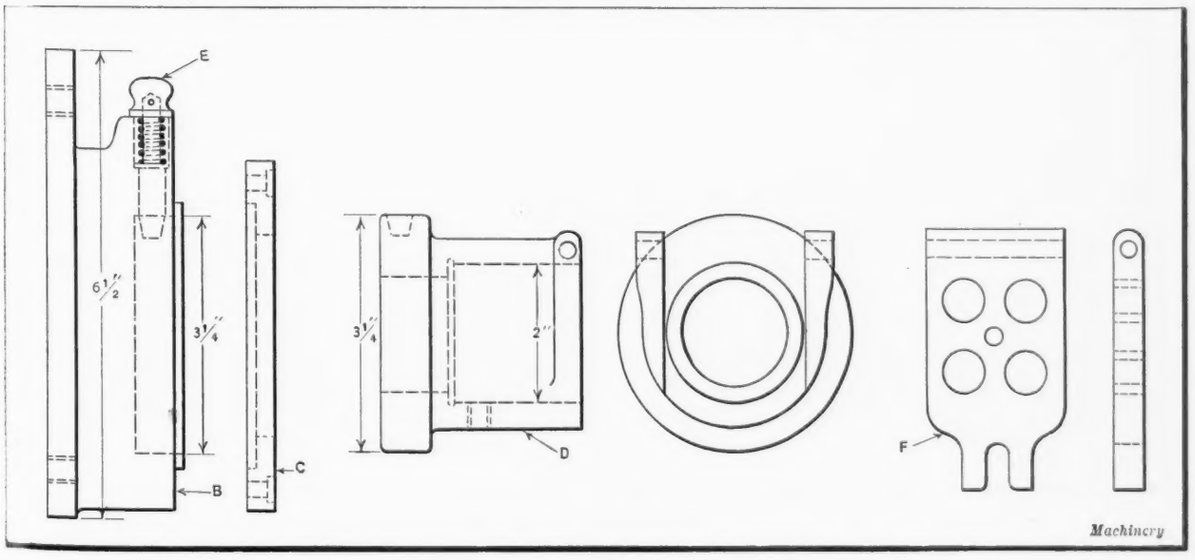

Fig. 2. Detailed Views of Parts of Fixture shown in Fig. 1

MACHINING IRREGULAR SHAPED CASTINGS

Small lots of castings of unusual design, as shown in Fig. 3, were required to be machined previous to the development of the tool equipment for regular production. Accordingly, the improvised fixtures shown in Figs. 1 and 2 were made up for use until the special tool equipment could be built. The castings are of special bronze, the one at the left in Fig. 3 being shaped like a shallow wash bowl with a plain rim around the edge and a small ball at the bottom of the bowl-shaped part. The opening shown in the side of the dome or bowl was cored out.

The machining operations on this casting consist of drilling and reaming the 11/16-inch holes at *A*, turning the rim at *B* to a diameter of 12 inches, and facing the front surface *C* for a width of ¼ inch, also cutting a ⅛- by ⅛-inch groove in the back side of the plain surface shown at *D*, Fig. 1, which is finish-faced for a width of ½ inch. The ball at *E* is finished to a diameter of ⅝ inch, and is required to be concentric with the machined rim of the bowl.

The first operation performed on the bowl-shaped casting is that of drilling and reaming the 11/16-inch holes. These reamed holes provide suitable means for holding the casting so that it will be properly aligned for all subsequent machining operations. Thus the various machined surfaces will be accurately positioned with respect to the axis of the part. The work is mounted on an ordinary lathe faceplate, as shown in Fig. 1, for all the turning operations. The two steel pieces *F* are fastened to the faceplate by machine screws. These pieces are also drilled and reamed to fit the 11/16-inch bar *G* which is used to hold the work in place. The steel pieces *F* are adjusted and fastened to the faceplate with the bar *G* in position. This adjustment must be carefully made so that the bar can be easily inserted or removed.

The adjusting screws *H* can be tightened against the inner surface of the casting along the axis so as to locate and hold the work in the correct position with respect to the longitudinal axis of the bar *G*. The small set-screws *J* serve to prevent screws *H* from becoming loose. Three screws *K* provided with check-nuts are equally spaced around the faceplate at a radius that will cause no interference with the back facing operations required in finishing the front surface of the rim. These screws are adjusted against the rim to bring it into a true running position. With this method of holding the work rigidly in place, all the machining operations can be performed without unclamping the work.

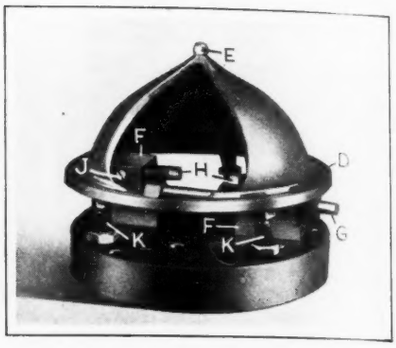

Fig. 1. Work mounted on Specially Equipped Faceplate

The part shown at the right-hand side of Fig. 3 is hemispherical in shape, and its axis is located on a center line passing through the centers of studs *L*. The finished raised rim *M* is required to be located exactly at right angles with the axis. The hole in the post *N* must be finished to a diameter of 1½ inches.

The procedure in machining this casting is first to drill the holes for the studs *L*. The 1½-inch hole in post *N* is then drilled, the casting being supported on the drill press by a bar pressed through the holes previously drilled and reamed to receive the studs *L*. The rim of the casting is finished by milling, the set-up shown in Fig. 2 being used for this work.

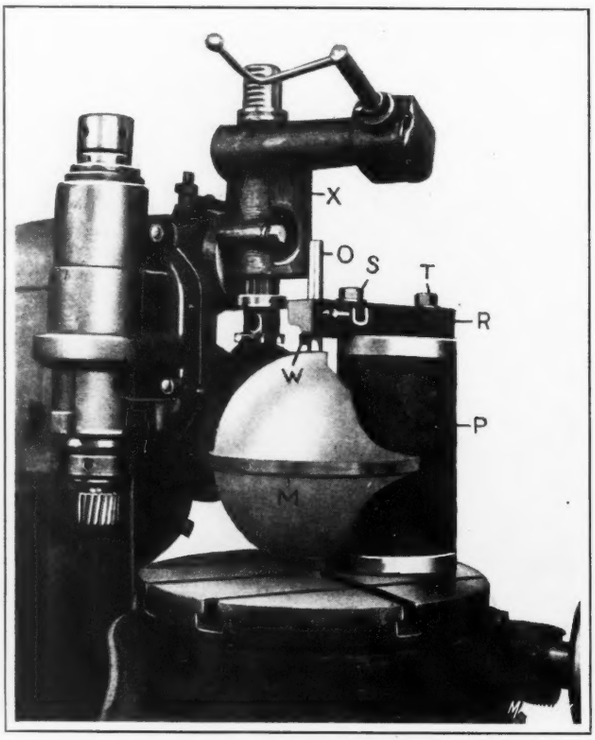

Fig. 2. Casting mounted on Milling Machine Ready for Milling and Graduating Operations

The regular milling machine turntable on which the work is mounted is provided with a centering plug which fits the shaft *O*. Shaft *O* is passed through the holes drilled and reamed for studs *L*, Fig. 3. The upper end of shaft *O* is held in place by an improvised tailstock consisting of a scrap piece of 7-inch wrought-iron pipe *P*, Fig. 2, which is squared up on both ends in an engine lathe to insure parallelism; a 1½- by 1¼-inch steel bar *R* with three holes drilled in it, two of which are for the bolts *S* and *T* that fasten the pipe to the turntable, and one for supporting the bar *O*. A ⅜-inch set-screw *U* serves to hold bar *O* in place. The set-screw *W* can also be adjusted to bear against the upper end of the casting. The pipe *P* serves as a driving dog for the casting, its diameter being such that it bears against two points on the work, one point being the hub *N*, Fig. 3, and the other the end of the rim *M* which is to be graduated.

The work of milling and graduating the rim is accomplished without changing the position of the casting. An end-mill is first used to finish the periphery of the rim, after which the work-table is brought up into position for graduating, which is done with the attachment *X*.

Springfield, Vt. O. S. MARSHALL

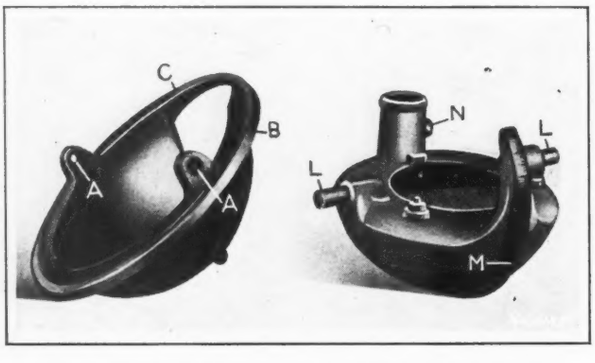

Fig. 3. Irregular Shaped Castings requiring Special Machining Operations

AIR KNOCK-OUT FOR POWER PRESS

An air knock-out controlled by a solenoid-operated valve, which is used on drop-hammers and punch presses for blowing the forgings or punchings from the dies, is shown in

the accompanying illustration. The puff of air which blows the work from the dies under a pressure of 80 pounds per square inch also removes scales or particles left in the dies. The switch units of the solenoid-operated valve are installed on the left-hand rear upright of the machine, and only the air outlet pipe or nozzle is attached to the left-hand front upright. The location or height of the nozzle above the lower die must be determined by trial. The principal unit, which is the solenoid valve *G*, can be put on the wall or any convenient place close to the air supply line.

When the press is in operation, a stud *A* secured to the ram strikes the finger *B* on its downward stroke, and by tripping the finger, places it in position to act upon the levers *C* and *D* on the upward stroke, so that the circuit in the switch *E* will be closed. The operating lever of valve *F*, which is connected to the magnet core *H* of the solenoid *G*, opens and closes the valve simultaneously with the making and breaking of the contact in switch *E*. Any suitable switch valve or solenoid can be utilized, and all other parts, such as angle-iron brackets and blocks for attaching the units to the machine, may be designed to suit the conditions. This method of controlling an air knock-out valve is superior to the mechanically operated types which are generally attached to the left-hand front uprights of the machines, because the constant jarring of the machine often causes the latter type to become loose.

Bloomfield, N. J. JOHN E. UNGER

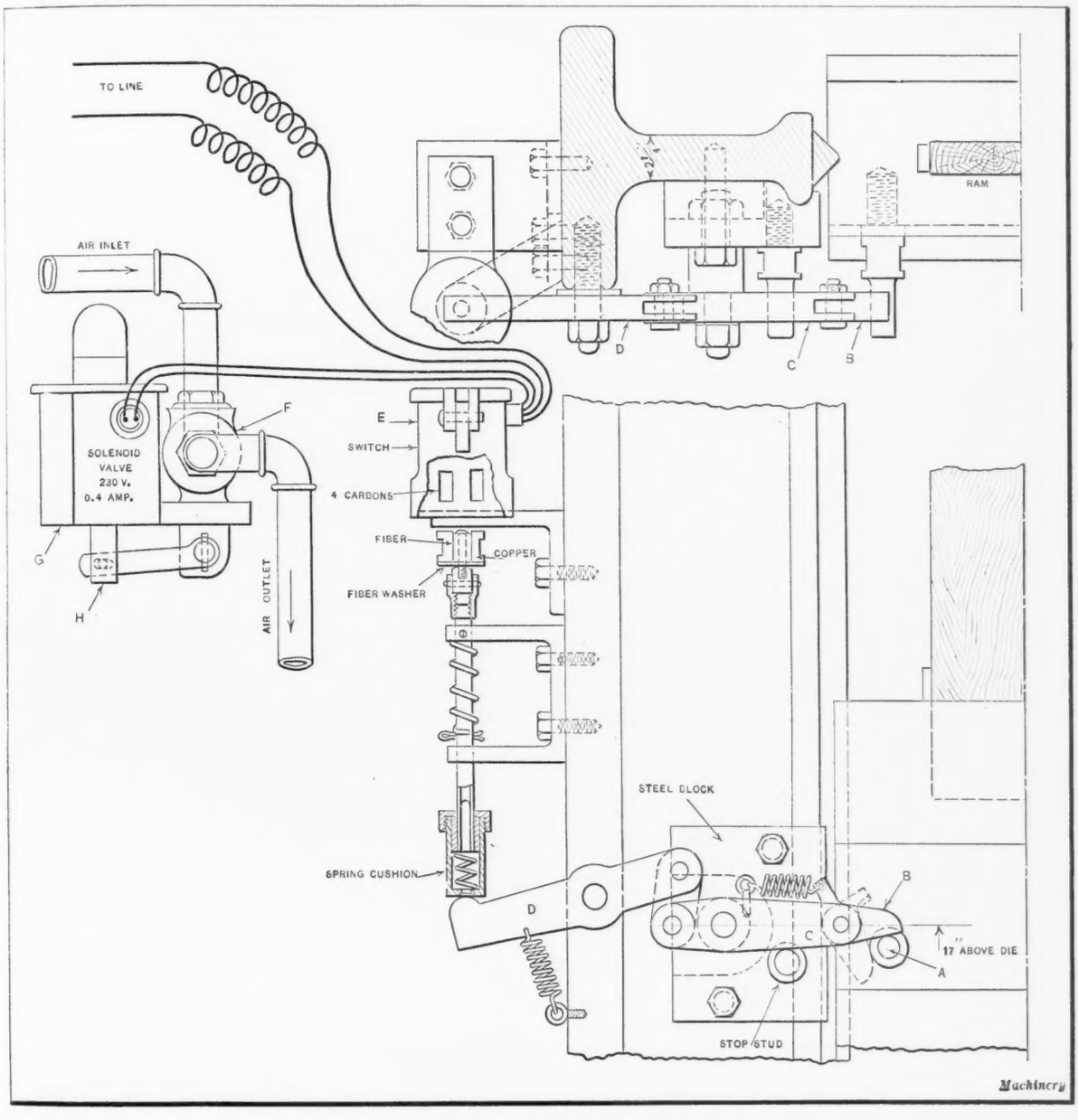

Solenoid-operated Air Knock-out for Power Press

BAR STOCK VERSUS FORGINGS

A considerable decrease in the cost of the gear blank shown in the accompanying illustration was made by using bar stock instead of forgings. The preliminary operations on the forgings were originally performed in a turret lathe. A different method, however, was employed when the pieces were made from bar stock. With the latter method a piece of steel, 51 inches in length, was cut off from bar stock. This piece was long enough to make fifteen blanks including the "cutting apart" allowances. A hole 2 inches in diameter was bored the full length of the bar, after which it was cut up into fifteen pieces. These pieces were then machined in the turret lathe. The operations consisted in roughing out the hub, finish-turning the hub, and finish-facing the side. From this point on, the machining operations were exactly the same as when the parts were made from forgings.

It was found that the time required for finish-facing, turning the hub, and drilling the 2-inch hole in a forging was

30 minutes, as compared with a machining time of 32.2 minutes for the operations required in making the part from bar stock. However, the total cost of producing a blank from a forging was found to be $2.39, whereas the cost of the part produced from bar stock was $1.81. This made a saving of 58 cents on every piece or a saving of $8.70 on a lot of fifteen pieces. In both cases the cost of machining and overhead expense was based on a rate of $1.50 per hour. On this basis the total cost of machining the forging was 75 cents and the cost of machining the piece from bar stock, 81 cents. The difference in the current price of the material, however, was in favor of the bar stock, the cost of the forging being $1.64 and that of the bar stock $1. Besides the saving realized by using bar

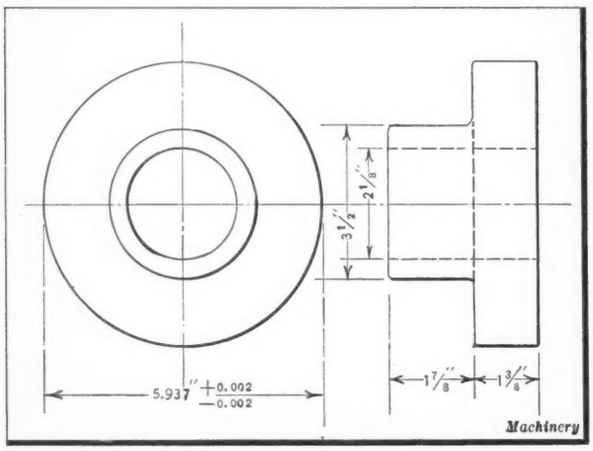

Gear Blank made from Bar Stock

stock, there were several reasons why it was more desirable to make the pieces from this material. With the bar stock, there was no hard outer scale to contend with, and no difficulty was experienced in holding the work, which was not the case with the forgings.

Cincinnati, Ohio HERBERT K. KEEVER

SLOTTING ON A BORING MILL

A hole, 2¾ inches square by 6 inches long, was required to be machined in a steel casting, and it was found that the only machine in the shop that could be used for the job was a boring mill. The way in which this machine was employed is described in the following: First, a 2¾-inch hole was drilled and reamed in the correct position. The work was then set up on the boring mill table, and carefully trued up from the reamed hole. Next, a regular square-nosed slotting tool, such as shown at *A*, Fig. 1, was made up and mounted in the tool-holder of the boring mill. A piece of steel *B*, about 1/16 inch thick by 1/2 inch wide, was placed midway between the two set-screws *C* and *D* at the back side of the holder. By loosening the lower set-screw and tightening the upper one, it was possible to rock the tool forward on the piece *B* so that its cutting edge would be fed outward. The vertical rapid traverse was employed to operate the slotting tool.

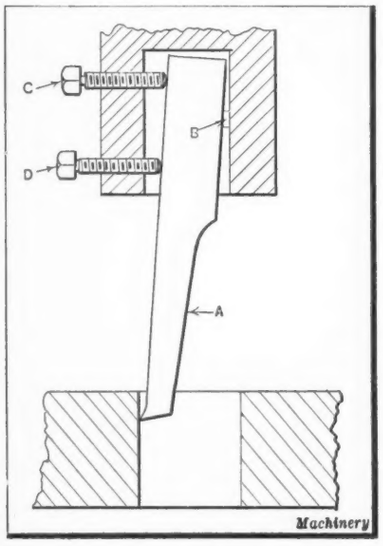

Fig. 1. Method of securing Slotting Tool in Boring Mill Tool-holder

The set-screws *C* and *D* were adjusted after each stroke, so that the cutting end of tool *A* was fed in the direction indicated by arrow *E* in Fig. 2, until it came to the side of the reamed hole. Then the cross-feed was employed to feed the tool to the right and to the left, as indicated by the arrows at *G* and *F*. After the metal was worked out at each corner, the boring mill table was revolved one-quarter revolution and the machining operation repeated. The same procedure was followed in finishing each of the four sides of the square hole.

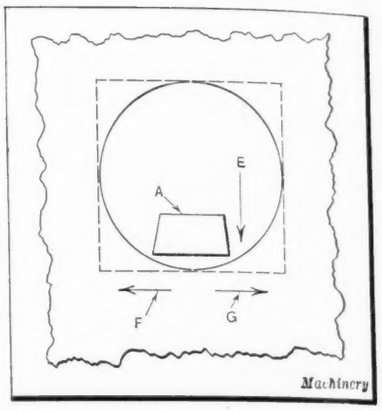

Fig. 2. Diagram illustrating Feeding Movements of Tool shown at A, Fig. 1

Massillon, Ohio G. R. CASTER

EQUALIZING TYPE OF WORK-HOLDING FIXTURE

The accompanying illustration shows the principle involved in the use of wedge-actuated stops or clamping pins for work of the kind indicated by the heavy dot-and-dash lines. The general practice is to have one solid or fixed pin and one wedge-actuated pin, but such an arrangement does not compensate for variations in the castings. In other words, if only one clamping pin is employed and the dimension *H* varies in different castings, the thickness of the base will not be kept uniform. For instance, the thickness *H* of the base will not be the same as the thickness *J* at the opposite side of the casting after the upper surface *K* has been machined, whereas with two wedge-actuated pins as shown in the illustration, these two dimensions will be practically the same.

The angle and length of the cuts forming the wedge sections of the round slide bar *C* which serves to raise the pins *A* are determined by the amount of variation in the

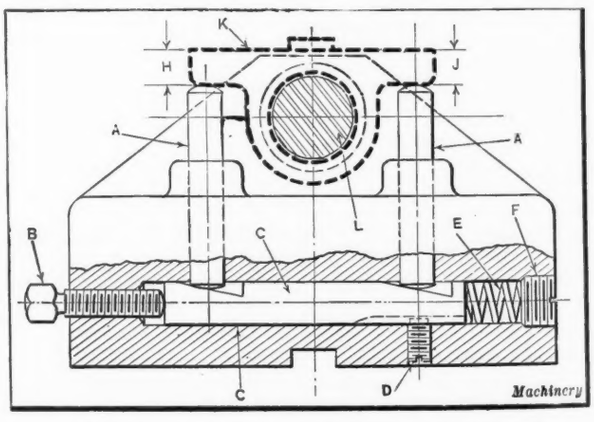

Fixture equipped with Two Wedge-actuated Clamping Pins

castings. The screw *D* having a pilot at its inner end which fits into a keyway on the under side of the bar *C* keeps the latter member from turning in the base of the casting. The spring *E* and the headless screw *F* force the slide bar *C* against the set-screw *B* when the latter is loosened to permit the pins *A* to drop down so that the work can be changed on arbor *L*. With this type of fixture, only a slight pressure in tightening screw *B* is required to exert considerable clamping pressure on pins *A*.

Fitchburg, Mass. E. E. LAKSO

WIRE-FORMING DIE

The wire-forming die shown in the accompanying illustration was designed by the writer for forming large quantities of wire pieces to the shape indicated at *A*. The die consists of a shoe *B* in which a slot is cut for the back slide *C*. To this sliding piece is fastened a forming tool *D*. The slide *C* is normally held back against a stop-pin by a compression spring located on its under side. The forming pin *E* is made from 5/8-inch drill rod, turned down to a diameter of 3/16 inch at the top end. The base of the pin is shaped as shown and inserted in the die-shoe, where it is backed up with a tool-steel piece *F* which is also inserted in the die-shoe. The upper surface of piece *F* is machined to a V-shape which conforms with the angle formed by the two straight sections of piece *A*.

Two hardened steel pieces *G*, with their inner ends beveled to an angle of 30 degrees, are inserted in the die-shoe. The beveled ends serve as cams to force the two hinged fingers *H* of the punch member inward, so that the wire is formed around the post *E* and against the V-shaped part of piece *F*. The hinged fingers *H* are normally held apart by a small compression spring *J* against the stop-pins *K*. The ends of pieces *H* are formed to an angle of 30 degrees on their outer sides to correspond with the beveled ends of the pieces *G* inserted in the die-shoe. The inner ends of the hinged fingers are shaped to fit the contour of the formed wire.

The piece of wire that is to be formed is placed on the die in contact with the back side of the pin *E* and between two stops that are not shown in the illustration. As the ram of the press descends, the slide-operating finger *L* comes in contact with the beveled end of slide *C*, forcing the latter member inward so that it forms the wire around the pin *E*. Slide *C* then remains stationary with the wire firmly pressed against post *E*, upon the continued downward movement of the ram, while the finger *L* simply slides over the end of part *C*. As the ram moves downward the two fingers *H* are brought in contact with the beveled ends of pieces *G*, so that the fingers are closed in around the wire, thus completely forming the eye of the work. After the ram has returned to the upper position, the operator removes the piece from the post *E* with a screwdriver. About 8000 pieces can be formed in a ten-hour day by an experienced operator, using a wire-forming die like the one described.

Albany, Ind. A. HALVORSEN

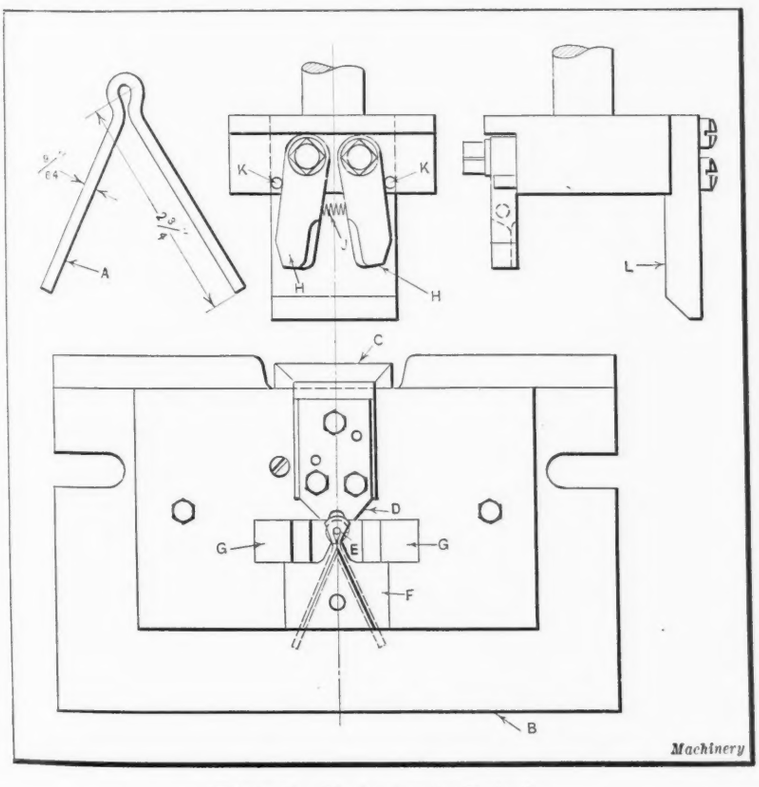

Wire-forming Die for Quantity Production

RATCHET FEEDING MECHANISM

A ratchet feeding mechanism employed to revolve a heavy cylinder is shown in the accompanying illustration. This device is designed to start the rotation of the cylinder with a sudden movement, stop it quickly, and hold it stationary for a predetermined period, and then repeat the operation. The view at the left-hand side of the illustration shows the mechanism in the position it occupies when the cylinder is being held stationary. The view at the right-hand side shows the mechanism in the position occupied just before the indexing movement begins.

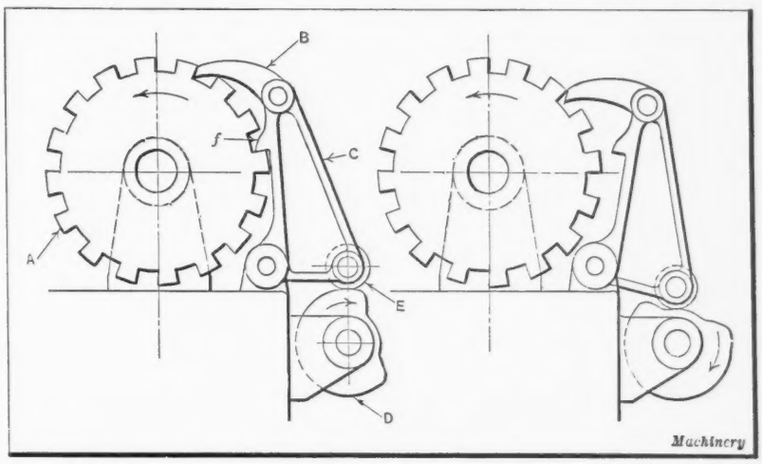

Cam-operated Ratchet Feeding Mechanism

It will be noted that there are but four principal parts to the mechanism, namely, the ratchet wheel *A*, the pawl *B*, the crank *C*, and the cam *D*. Cam *D* rotates continually in the direction indicated by the arrow. When the roller *E* on crank *C* reaches the highest point on cam *D*, the ratchet *A* will have been completely indexed and be locked by the tooth *f* on the crank *C* from further rotation in the direction of the arrow, while the pawl *B* will prevent it from being rotated in the reverse direction.

Rochester, N. Y. MALCOLM P. DAVIS

* * *

AID TO WELDING SCHOOLS

The Educational Committee of the Gas Products Association, with headquarters at 140 S. Dearborn St., Chicago, Ill., is prepared to render assistance to welding schools through special representatives and service men maintained by the association. It is recommended that a definite amount of instruction be given in each school, and the association offers assistance in arranging courses to cover the amount of ground considered satisfactory. The association will also aid in reducing the cost of instruction by supplying apparatus and gas at the lowest possible figure. Aid will also be given in placing graduates of schools that give a complete course of instruction.

Shop and Drafting-room Kinks

DRILLING OUT THIN WASHERS

A troublesome little job occasionally encountered in the shop is that of drilling out thin brass washers with a drill 1/64 inch larger than the hole in the washer. After trying to hold washers of this kind with a pair of pliers and also with a hand vise without much success, the writer hit upon the method described in the following, which proved very satisfactory. A piece of heavy steel tubing, the inside diameter of which was the same as the outside diameter of the washer, in this case ¾ inch, was tapped out at both ends for a ⅞-inch cap-screw like the one shown at *A* in the illustration.

One of the cap-screws *A* was screwed into one end of the tube *B*, which was filled with the washers that were to be drilled. Another cap-screw like the one shown at *A* was tightened down on the washers at the other end of the tube. The tube with the washers clamped in place, was put in a

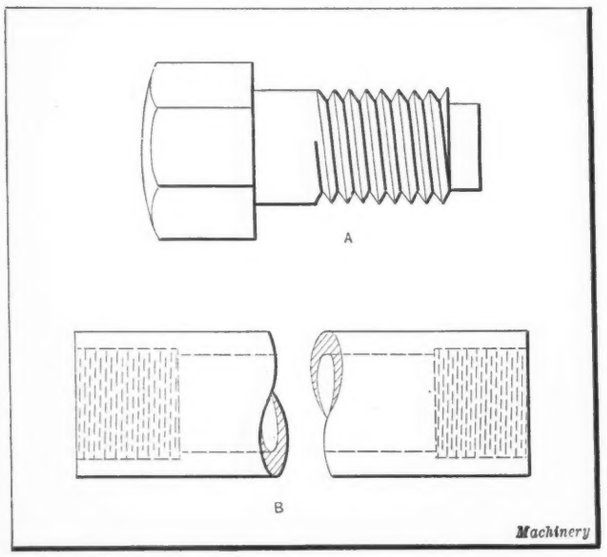

Tube and Cap-screw which form Part of Washer-holding Device

three-jaw chuck, and the head of one of the screws squared up and centered. It was then a simple matter to run a drill through the cap-screw and the washers inside the tube. The operation of loading the holder and drilling out the washers was repeated until the job was completed.

East Walpole, Mass. JAMES A. KIRK

GRADUATED RECESSING TOOL

A recessing tool for use in a turret lathe is shown in the accompanying illustration. It is provided with a graduated scale which facilitates setting the tool for cutting a recess at the required distance from the end of the work. The scale *B* may be an old machinists' scale which has become worn or rounded on the corners to such an extent that it is not suitable for general use.

A tool made up as shown has been found very useful in recessing brass sleeves. The sleeves were all of the same diameter but different lots were required to have the recesses cut at different distances from the end. The body *A* is made of cold-rolled steel which fits the turret hole. A flat is milled on the top of body *A* to take the scale *B;* the scale is held in place by two screws *E* that are flush or a little below the top surface of the scale.

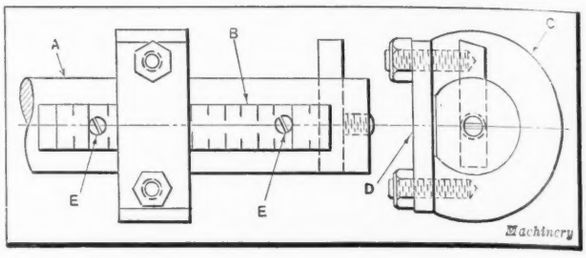

Recessing Tool provided with Scale and Stop-collar for locating Recess

The stop-collar *C* is cut away on one side, and a clamping plate *D* is attached to it by two screws. It will be noted that the end of the scale is located midway between the sides of the recessing tool. This was necessary with the tool shown because the dimensions were always given from the end of the work to the center of the recess. By having plate *D* in contact with the scale very accurate settings can be made. Another advantage of this arrangement is that the operator has the setting before him all the time, which eliminates the necessity for frequent measuring to determine if the collar is correctly located.

Rosemount, Montreal, Canada HARRY MOORE

TURNING A CURVED SURFACE ON A ROLL

Recently two large rolls were required to be turned so that the diameter at the center would be ⅛ inch smaller than the end diameters, the profile to conform with an arc having a radius of approximately 600 feet. The rolls were 5 feet long, one being 9 inches in diameter and the other 17 inches in diameter.

It is obvious that the making of a master cam or templet for a job of this kind would be expensive and rather difficult. Instead of following this method, two cold-rolled steel plates were inserted under the lathe tailstock so that it was raised up a distance indicated by dimension *H* in the accompanying diagram. The tool was adjusted to travel along the straight line *T* which is located above the center line *B* of the lathe spindle a distance equal to one-half *H*. The curved surface obtained with the lathe set up in this manner did not vary theoretically from the arc of a true circle more than 0.0001 inch. The formula

$$H = \sqrt{D^2 - d^2} \times \frac{A}{L}$$

in which *A* equals the distance between the lathe centers, may be used for obtaining the thickness of the plates employed to raise the tailstock.

Torrance, Cal. F. L. GILLETT

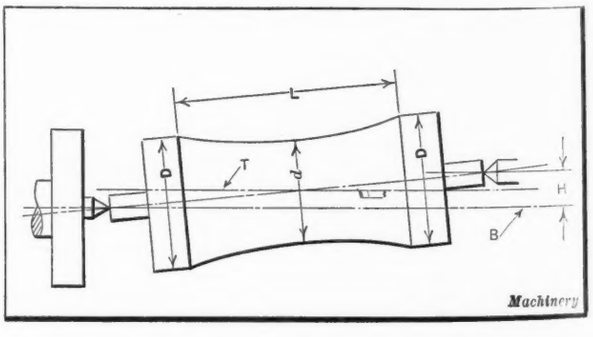

Diagram showing Method used in turning Curved Surface

Questions and Answers

LUBRICANTS FOR DRAWING BRASS

H. B. S.—What lubricant is generally recommended for use in connection with drawing operations on brass and copper parts?

A.—This question was submitted to several manufacturers of sheet-metal products, and summaries of their replies follow, each paragraph containing the information obtained from a different company:

1. For drawing operations on brass and copper we have used soap for many years. Ivory soap chips mixed with water and kept warm have proved very successful. The quantity of soap used depends largely upon the thickness of the metal and the severity of the operation.

2. The lubricant used for drawing brass shells, such as cartridge shells, consists of a solution of soap dissolved in water, the consistency being changed to suit the requirements. For heavy shells the solution should be thick—almost like gelatine—and for smaller shells, very thin, so that it will run through the feed pipes without clogging. In the first cupping operation, oil, known under the trade name of "cupping oil," is preferred, as it has more body than the soap solution, and therefore has a better lubricating effect during the cupping operation, which is a heavy one, displacing considerable metal.

3. From experience we find the best lubricant for brass and copper consists of hard soap dissolved in equal parts of warm water and pure lard oil.

CAN PATENT TERMS BE BROADENED AFTER ALLOWANCE?

R. A. B.—The United States Patent Office allowed me an application for letters-patent a little more than two months ago, but I now find the claims granted by the examiner do not give me the protection to which I believe myself justly entitled. Is there any course open to me by which I can have the case reconsidered with added claims, or amend the present claims to broaden their terms?

ANSWERED BY GLENN B. HARRIS, YONKERS, N. Y.

It would first be well to ascertain whether or not the claims originally presented by your attorney (and it is taken for granted that you had one) embodied what you now seek to obtain, and whether or not these claims were disallowed by the examiner on reference to previously granted patents. If the latter is not the case, then a motion or request may be made to the examiner to permit the withdrawal of the application from allowance, and the introduction of the new or amended claims.

If the examiner is of the opinion that the request has merit, he may recommend to the commissioner that the application be remanded to him for further consideration, but the rules of practice of the Patent Office make it clear that this is not a matter of right, but one solely within the discretion of the commissioner. If, however, the final fee has been paid, the application cannot be withdrawn from issue except to correct an error on the part of the Patent Office, or because of fraud or illegality. It may also be withdrawn to permit of its being admitted to interference proceedings with one or more parties claiming the same invention.

PREFERRED NUMBERS

C. S.—What is the meaning of the term "preferred numbers" as applied in connection with standardization work?

A.—The term "preferred numbers" has been applied to series of numbers representing geometrical progressions but based upon *preferred* factors or ratios which are certain roots of 10. The ratio of progression, as advocated by German engineers, is either the fifth, tenth, twentieth, fortieth, or eightieth root of 10. This system has been proposed as a universal standard for use whenever a series of sizes or values is required, particularly in the manufacture or design of tools, products, or machines intended for general application in the mechanical industries.

PRESSURE OF CAM ON ROLLER

G. O. F.—Please give a simple method for calculating the pressure exerted by a uniformly accelerated cam surface against the roller in contact with it, when the torque of the cam driving shaft is known.

ANSWERED BY V. CHARUSHIN, FITCHBURG, MASS.

Referring to the accompanying diagram, let it be assumed that the torque is constant and that the cam moves counterclockwise. The force acting on the periphery of the cam,

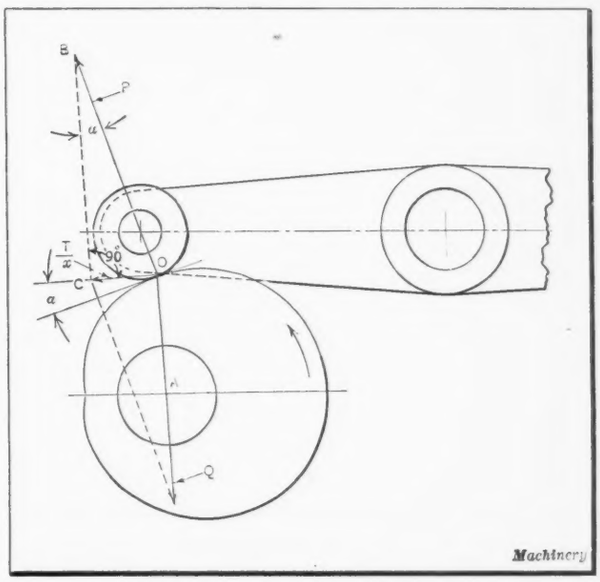

Diagram used in determining Pressure exerted on Cam Roller

due to the constant torque T, is equal to $T \div x$, where x is the momentary radius OA of the cam at the point of contact between the cam and the roller. The pressure on the roller, which is to be determined, is directed from the point of contact through the center of the roller along the line OB. The force $T \div x$ can be easily resolved into two other forces which will be mechanically equivalent to the original force in their action. One of these components P will act in the direction OB, and the other Q in the direction OA through the center of the cam.

The second of the component forces will represent the cam bearing pressure, and the first the pressure on the roller, which is to be determined. In the triangle OBC the side OC is at right angles to the radius OA of the cam. The line BC is parallel to OA and at right angles to OC. Thus we have

$$OB = \frac{OC}{\sin a}$$

in which a is the constant angle of the uniformly accelerated cam. By substituting for OC its equivalent $T \div x$, the required pressure on the roller represented by OB or P can be determined. We then have

$$OB = \frac{T \div x}{\sin a} = \frac{T}{x \sin a}$$

STANDARD PITCHES FOR MACHINE SCREWS

A. C. M.—According to tables in engineering handbooks, machine screws of a given diameter do not always have the same pitch or number of threads per inch. What standard is the most prevalent at present or the one that agrees with most of the machine screws now on the market? Has anything been done toward the adoption of a single standard, so that machine screws of corresponding diameter obtained from different screw manufacturers will have an equal number of threads per inch?

A.—In order to explain the present situation in regard to machine screws, it seems advisable to review briefly the standardization work done previously. The first standard to be recognized by most machine screw manufacturers was the one adopted by the American Society of Mechanical Engineers in 1907. The A. S. M. E. standard was established to replace the private standards of screw manufacturers, which varied to a certain extent. The A. S. M. E. standard includes two series of pitches. The series for the finer pitches is known as "standard" and the series for the somewhat coarser pitches is designated as "special." The pitches in the A. S. M. E. standard were based largely on standards formerly adhered to by prominent screw manufacturers, in order to avoid unnecessary changes. While these standards varied more or less, pitches for certain sizes were in general use, and the A. S. M. E. "special" series includes practically all of these more common pitches; consequently, the adoption of the "special" series by the screw manufacturers involved comparatively few changes, and the result is that most machine screws on the market at present conform to the A. S. M. E. "special" series of pitches (with a few exceptions), rather than to the series designated as "standard."

MACHINE SCREW SIZES AND STANDARD PITCHES

Screw Number or Size	Outside Diameter, Inch	Threads per Inch				
		National or American Standard		A.S.M.E. Standard		Other Pitches Used by Some Manufacturers
		Coarse Thread Series	Fine Thread Series	Standard	Special	
0	0.060	..	80	80	.....	.....
1	0.073	64	72	72	64	.....
2	0.086	56	64	64	56	48
3	0.099	48	56	56	48	.....
4	0.112	40	48	48	40–36	32
5	0.125	40	44	44	40–36	32
6	0.138	32	40	40	36–32	30
7	0.151	..	..	36	32–30	.....
8	0.164	32	36	36	32–30	.....
9	0.177	..	..	32	30–24	.....
10	0.190	24	32	30	32–24	.....
12	0.216	24	28	28	24	20
14	0.242	..	..	24	20	18
1/4	0.250	20	28	..	.....	.....
16	0.268	..	..	22	20	18–16
18	0.294	..	..	20	18	16
5/16	0.3125	18	24	..	.....	.....
20	0.320	..	..	20	18	16
22	0.346	..	..	18	16	.....
24	0.372	..	..	16	18	14
3/8	0.375	16	24	..	.....	.....
26	0.398	..	..	16	14	.....
28	0.424	..	..	14	16	.....
7/16	0.4375	14	20	..	.....	.....
30	0.450	..	..	14	16	.....
1/2	0.500	13	20	..	.....	.....

Machinery

The A. S. M. E. standard (including the "standard" and "special" series) has now been superseded, in so far as official recognition of the society is concerned, by the National or American screw thread standard, which includes machine screw sizes, as well as larger screw threads, up to diameters of 3 inches. This change, however, is not so radical as might be inferred, because, in the first place, many of the screw sizes and pitches of the new standard (within the usual range for machine screws) are the same as the A. S. M. E. standard. As we are now dealing with machine screws, what follows will apply only to that part of the National or American standard that covers the ordinary range of machine screw sizes.

According to this new standard, sizes from 0.060 inch up to ¼ inch are designated by numbers, following the universal practice for machine screws; the ¼-inch diameter and larger sizes are expressed by fractional dimensions. The differences between this new standard and the A. S. M. E. standard are shown by the accompanying table which includes only the smaller diameters of the new standard or those within the ordinary range of machine screw sizes. As this table shows, the National or American "coarse thread" series is the same as the A. S. M. E. "special" series up to the ¼-inch size, except that the latter contains two pitches for all screws between numbers 4 and 10, inclusive, and, in addition, numbers 7 and 9 represent sizes not included in the newer standard. Since the A. S. M. E. "special" series has been the most prevalent machine screw standard up to the present time, naturally the "coarse thread" series of the new standard is the one that is being applied mostly in machine screw manufacture. In this "coarse thread" series, the use of two pitches for sizes from 4 to 10 was discontinued and the pitches selected are the ones most commonly used.

The National or American standard screws of ¼ inch size and larger differ entirely from the A. S. M. E. standard, the odd diameters of the latter having been superseded by common fractional dimensions, and a number of sizes considered unnecessary having been omitted. The new standard retains the U. S. form of thread, and the sizes of ¼ inch and larger in the "coarse thread" series conform to the U. S. standard, whereas the "fine thread" series from ¼ inch up to 1½ inches agrees with the S. A. E. standard.

This new standard was established primarily by the National Screw Thread Commission, but a sectional committee of the American Society of Mechanical Engineers recommended, after careful study of the commission's report, certain modifications which were mutually satisfactory. Unfortunately, however, the names "National" and "American" have both been applied to this standard. The National Screw Thread Commission in its report uses the name "National," whereas the American Society of Mechanical Engineers (which has approved of the new standard) gives preference to the name "American." In order to avoid the confusion that would inevitably result from the independent use of different names for the same standard, the two names mentioned are sometimes used in combination, one arrangement being National (American) and the other American (National). While such a compromise is better than the independent use of each name, the advantages of having one name for a standard intended for general adoption are evident.

STRAIGHT OR TAPERED DOWEL-PINS?

O. C. H.—Is the use of straight dowel-pins or tapered dowel-pins considered the better or more common practice in the making of built-up or sectional dies for power presses?

ANSWERED BY EDWARD J. RANTSCH, BROOKLYN, N. Y.

It has been the experience of the writer that straight, hardened dowel-pins made from drill rod are best for all die work. When it is necessary to repair a die, the dowel-pins must be driven out, and driven back in place again when reassembling the die. If a soft tapered pin is used, both ends will be swelled or upset, and the alignment of the die members may thus be affected. This will not happen if hardened dowels are used. The straight dowels made from drill rod stock should be hardened in oil, as they are likely to crack if quenched in water. After quenching in oil, the temper of the pins should be drawn to a deep brown color. Straight dowels made in this manner and properly fitted in accurately reamed holes will prove very satisfactory.

MACHINE TOOL MEETING AND EXHIBIT IN NEW HAVEN

At the fourth annual machine tool exhibit in New Haven, which will be held September 15 to 18 in the Mason Laboratory of the Sheffield Scientific School, Yale University, under the joint auspices of the university, the American Society of Mechanical Engineers, and the New Haven Chamber of Commerce, a comprehensive technical program will be presented. The keynote of the technical meeting will be "Greater Production," and both the program and the exhibition will be arranged with that idea in mind. The American Society of Mechanical Engineers will be responsible for the technical program.

This year special efforts are being made to obtain from the manufacturers in the Middle West representative exhibits, and exhibitions from Cleveland and Cincinnati manufacturers have been secured; altogether, 120 manufacturers will exhibit machine tools and manufacturing equipment. The faculties of several western colleges have been invited to attend, together with delegates from their classes. Arrangements are being made to obtain several speakers of national prominence.

Information regarding the exhibition may be secured from Professor S. W. Dudley, secretary, Mason Laboratory, New Haven, Conn.

The technical program will be as follows: "Review of Foreign Progress in Machine Shop Research," by C. A. Beckett; "Discussion of Research in Machine Shop Practice in the United States," by Wilfred Lewis and B. H. Blood; "Forecasting Demand for Machine Tools," by E. F. DuBrul; "General Discussion of Education and Training for the Industries," by J. A. Smith and George B. Thomas; "Comparative Methods of Tool Design and Relation to the Quantity Production of Sheet-metal Parts," by D. M. Chason; "Application of Ball Bearings to Machine Tools," by H. Reynolds; "Shop Measurements," by Earle Buckingham; "Description of a New Planer," by G. E. Greenleaf; "Selling Standards to Manufacturing Organizations," by E. C. Peck; "Standardization versus Individuality," by L. D. Burlingame; "The Value of Standardization with Examples of Accomplishment," by G. T. Trundle, Jr.; "Manufacturing Design of Ordnance Material," by J. D. Pedersen.

Forecasting Demand for Industrial Equipment

Ernest F. DuBrul of Cincinnati, Ohio, general manager of the National Machine Tool Builders' Association, will deal with the business cycle in the machine tool industry, and point out the importance of cooperative study of business conditions in order to obtain stabilization in industry. In introducing his paper, Mr. DuBrul will point out that certain economic forces unfavorably affect all equipment industries and make them more subject to irregular operation than industries making consumer goods. These forces affect the well-being of all participants in these industries, wage earners, salaried staff, and investors. Their operation and effects have not received the consideration they should have had from the thinking or planning staff of those industries —otherwise the unfavorable effects would be less marked than they are.

Every month Dun's Agency reports failures by number and amount of liabilities, classified by the various branches of manufacturing and trading in which the bankrupt concerns engaged. The class listed as "machinery and tools" leads all the other classes of bankrupt manufacturers. The problems of the balance sheet must be studied by engineers as well as the problems of the drawing-board, or of the time-study room.

Standardization versus Individuality

In his paper relating to standardization, Luther D. Burlingame, industrial superintendent of the Brown & Sharpe Mfg. Co., Providence, R. I., will present a word of caution against the too eager adoption of ill-advised standards. In introducing his paper, Mr. Burlingame refers to a statement by Dr. W. H. P. Faunce, president of the Brown University, in which he deplores any tendency toward standardization in the training of a student body, and emphasizes the importance of individuality, saying that standardization typifies a "drab" monotonous level in life, and that individuality stands for variety, invention and progress.

Herbert Hoover, in his campaign for the elimination of waste in industry, urges the importance of standardization, including reduction of the varieties and sizes of manufactured articles, in the interests of efficiency and economy.

Much can be said in favor of each point of view, depending on the interpretation. In dealing with standardization, as with many other important issues, the best and safest course may be a middle ground, reached by carefully feeling the way toward standardization, where it seems most definitely called for, but guarding against the abandonment of basic standards and established practices until the benefits of a change are evident.

Shop Measurements

In his paper on shop measurements, Mr. Buckingham of the Pratt & Whitney Co., Hartford, Conn., will refer to the existing standards of measurements both in the English and metric systems, will explain how they are related to each other, and will dwell upon the actual purpose of shop measurements and the relation of accuracy to economical production. Among the many interesting things that will be brought out by Mr. Buckingham is the inter-relation between the yard and the meter. The absolute relationship between the yard and the meter, according to Mr. Buckingham, may never be established. Many comparisons have been made, and results varying from each other by three or four parts in a million have been obtained. At the present time, the legal relationship between the yard and meter in Great Britain is:

1 meter = 39.370113 inches

The legal relationship between the yard and meter in the United States is:

1 meter = 39.37 inches

The difference between these two relationships is about three parts in a million, a difference so small that it may be neglected entirely as far as machine-shop practice is involved.

It has been proposed that the two foregoing relationships be discarded in favor of the following:

1 inch = 25.4 millimeters

This relationship would make 1 meter = 39.370078 inches, a value between the two previous ones. Any one of these three values is sufficiently accurate for all practical purposes. These figures represent the relationship between the abstract length of the yard and the abstract length of the meter.

Mr. Buckingham will also point out the complications arising from the fact that standards of measurements in different countries, and even in the same countries, are measured at different temperatures. For example, the fundamental English standard of length is the distance between two fine lines graved on gold blocks in the bronze bar at Westminster, England, when this bar is at a temperature of 62 degrees F. At present, however, two different temperatures at which measuring instruments of English units of length are nominally of correct length or standard are used. These temperatures are 62 and 68 degrees F.

The fundamental metric standard of the length of one meter is the distance between two fine lines graved on a platinum-iridium bar at the International Bureau of Weights and Measures at Sevres, France, when this bar is at a temperature of 0 degrees C. (32 degrees F.). For general industrial use at the present time, however, there are two different temperatures at which metric measuring instruments are nomically of correct length. These temperatures are 0 degrees C. (32 degrees F.) and 20 degrees C. (68 degrees F.). Therefore, when close measurements are required, it is necessary to know the temperature at which the measured parts are to be standard.

GRINDING SPRINGS AND WASHERS

For grinding the ends of coil springs and the sides of bronze thrust washers at high rates of production, Charles H. Besly & Co., 120-B N. Clinton St., Chicago, Ill., has recently equipped two No. 6 machines with special feeding devices. Fig. 1 shows the machine arranged for the first operation mentioned, this machine being provided with 24-inch ring-wheels for dry grinding. The springs are 1¼ inches in diameter by 1⅜ inches long, and are made of 3/16-inch wire with about one-half a coil at each end. They are fed into a chute by the operator, picked up by the rotary feeding wheel, and carried between guides to the grinding wheels which carry them down and finally drop them out at the bottom into a receptacle with both ends finish-ground. The production averages 3000 springs per hour.

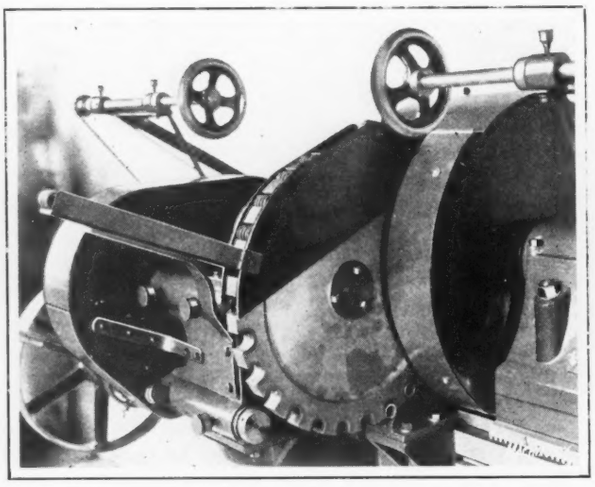

Fig. 1. Rotary Work-feeding Fixture used in grinding the Ends of Coil Springs

The rotary feeding wheel, which is fitted with removable hardened steel bushings and a backing bar lined with heat-treated steel and machined to conform to the circumference of the feeding wheel, is secured between the grinding wheels to hold the work in place while grinding. The grinding wheels do not open to allow the work to enter, but instead are locked in place, the only adjustment necessary being that to compensate for wear. The springs are compressed as they pass between the guides. A close-up view of the feeding wheel is shown in Fig. 2. Other details of this machine follow closely the design illustrated in August MACHINERY, which was arranged for grinding valve sleeve parts. However, the grinding wheel spindles of that machine were direct motor-driven, whereas the present machine is equipped with pulleys instead.

The second machine mentioned at the beginning of this article is also motor-driven and follows closely the design of the machine illustrated in August MACHINERY. This machine is furnished with 20-inch disks for wet-grinding the cast washers, which are 3⅛ inches in diameter, ⅛ inch thick, and have a 2¼-inch hole. Two operations are necessary because of the accuracy required and the amount of stock that must be removed. The first operation consists of rough-grinding the washers to within 0.008 inch of the finished size, about 0.020 inch of stock being removed from each side. The production is about 1800 pieces per hour, but it is said that if the amount of stock removed from each side could be reduced to about 0.015 inch, the production could be increased to 2400 pieces per hour. The second operation consists of finish-grinding to plus or minus 0.0005 inch in thickness and parallelism, the production averaging 2400 washers per hour.

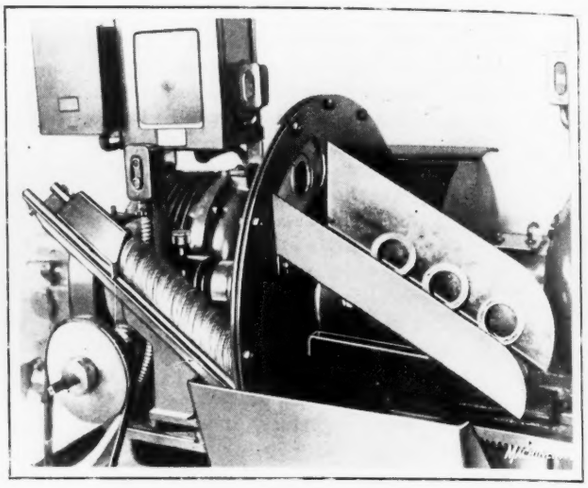

Fig. 2. Feeding Arrangement employed in carrying Bronze Washers between Grinding Disks

The washers are placed by the operator in the inclined chute seen in Fig. 2, and automatically fed into holes in the feeding disk. This disk is 3/32 inch thick, made of heat-treated carbon steel and provided with four holes equally spaced. The washers are carried down between guide plates to the under side of the grinding disks. When the work is about ½ inch from these disks, the latter open and allow the work to enter about two-thirds of the way. Cams on the outer ends of the spindles gradually bring the grinding disks together as the feeding disk carries the work through the machine.

When the work has reached a point about ½ inch from the outer edge of the grinding disks, the cams release the pressure on the disks and the finished washer comes out at the top while another washer is fed in at the bottom. The work is automatically ejected from the feeding disk into the second chute and rolls down into a receptacle. The grinding wheels run in opposite directions to cause the washers to rotate slightly for obtaining parallelism.

* * *

PLATE AND COIL CLUTCHES—A CORRECTION

In connection with an article on "Plate and Coil Clutches," published in August MACHINERY, (beginning on page 953) a clutch was shown in Fig. 1 which does not represent the present design made by the Hilliard Clutch & Machinery Co., Elmira, N. Y. The sectional view reproduced herewith shows the present standard construction. It will be noted that this clutch has a guard ring over the gears and other improvements not included in the design shown in August.

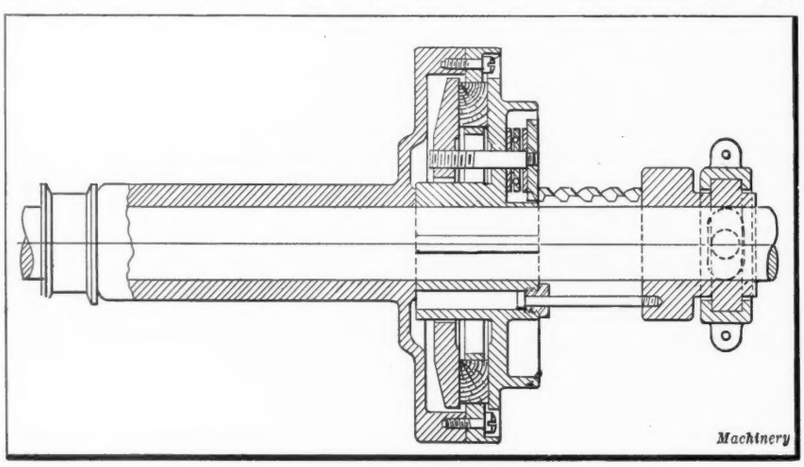

Present Design of Hilliard Friction Clutch

AN UNUSUALLY LARGE UPSETTING MACHINE

An upsetting forging machine that will weigh approximately 310,000 pounds, or 155 tons, is being built by the Ajax Manufacturing Co., Cleveland, Ohio. It is believed to be the largest machine of this type ever constructed. The illustration gives a few general dimensions from which it will be seen that the overall length is slightly more than 27 feet. The width of the bed proper is limited to 10 feet 5 inches by shipping restrictions. The bed is a steel casting and alone weighs 165,000 pounds. There are two flywheels which are 7 feet in diameter, have a face width of 15 inches and weigh 10,000 pounds each. The machine will accommodate dies 16 inches thick, 36 inches long and 36 inches high, which will weigh about 5700 pounds each. A 100-horsepower motor will be required to drive the equipment. This machine is to be used for upsetting the ends of seamless steel tubing at the new plant of the National Tube Company, Gary, Indiana.

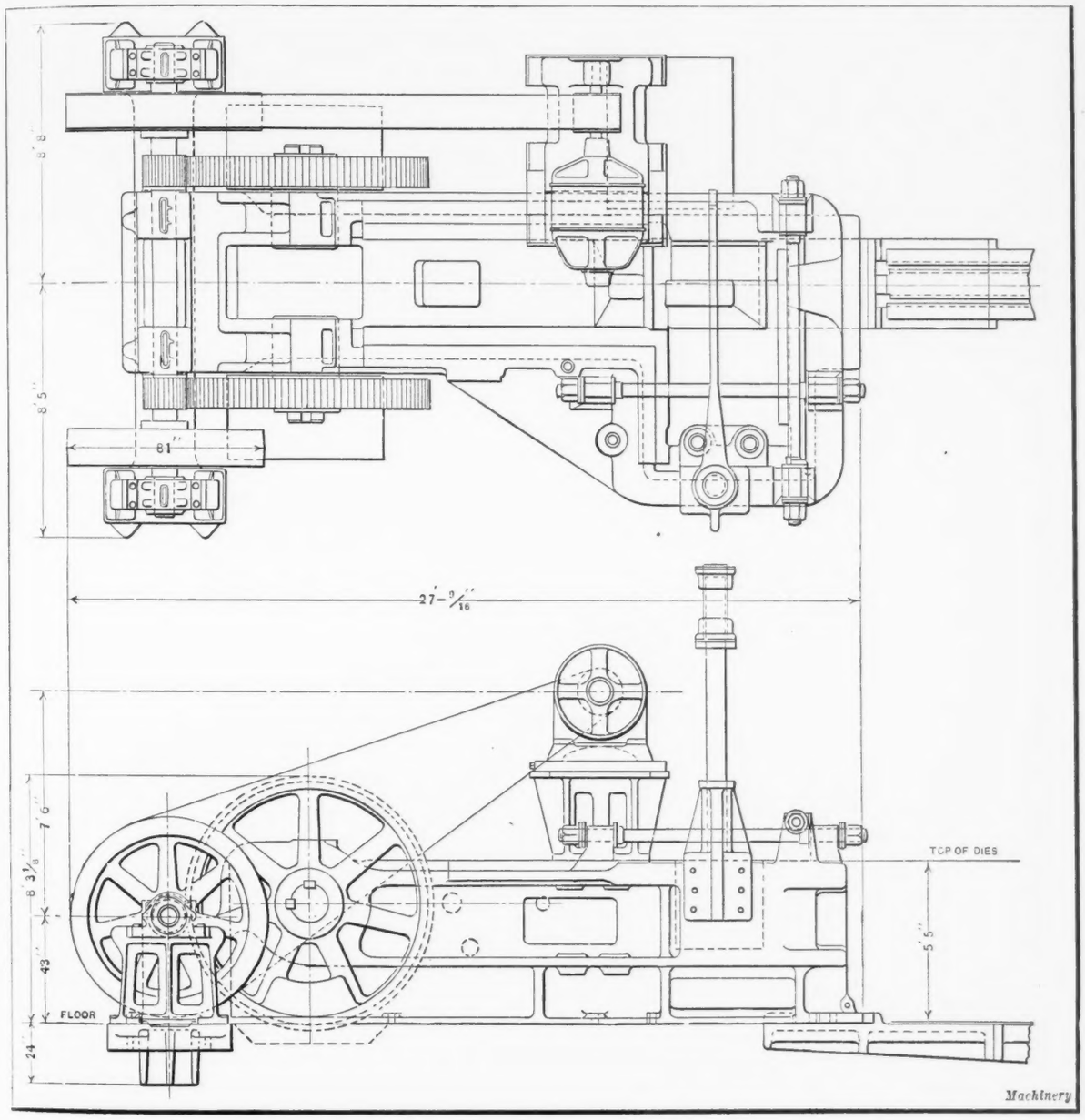

Overall Dimensions of a Large Upsetting Machine being built by the Ajax Mfg. Co.

* * *

Of the 100,000 blind persons in the United States, approximately 15,000 have lost their sight in the pursuance of industrial occupations.

COURSES IN INDUSTRIAL MANAGEMENT

The Department of Business Management of the School of Commerce, Accounts, and Finance of New York University announces two courses in industrial management to be given during the coming year. One of these will deal with factory organization and management, and will be conducted by J. P. Jordan, industrial engineer and consultant in costs. The other course will be in factory engineering and cost reduction, under Professor N. T. Ficker. The latter is a non-technical course dealing with the industrial engineering and management problems that come up every day in all lines of manufacturing. Both of these courses will be given at the New York University Building, 32 Waverly Place, New York City, beginning the week of September 22. Mr. Jordan's course will be given on Monday evenings from 6 to 7:45, and Professor Ficker's group will meet on Wednesdays from 8 to 9:45 P. M.

* * *

The conditions in many branches of the machine industry in Sweden continue to be unsatisfactory. On September 1, 1920, 376 shops in Sweden engaged in the machinery industry employed approximately 60,000 men. Today there are 331 shops working in this industry, employing 37,200 men.

The Machine-building Industries

THE activities in the machine-building industries depend directly upon the state of prosperity in other industries, in the transportation field, and in agricultural pursuits. It is, therefore, gratifying to be able to record that after several months of declining production, it appears that the lowest point in the business curve was reached early in July, and that since that time in most industries, and especially in the more basic ones, there has been a gradual improvement.

In reviewing the conditions now existing, the Federal Reserve Bank of Cleveland—always conservative in its judgment—sums up the situation by stating that there has been lately "a distinctly better feeling with regard to the business situation. Although the dullness noted in the past has continued to affect business as a whole, the outlook is brighter in spots, and there is beginning to be felt the influence of certain factors which indicate that the end of the recession may be near at hand. Just how soon a definite general up-turn may be expected is a matter of conjecture, but the rise of security values during the past few weeks denotes confidence."

The favorable indications of an improvement in business are quite definite: Operations in the iron and steel industry are increasing; the production of automobiles was larger in July than in June, and is likely to be larger in August than in July; there is generally an increased demand for manufactured goods, due to the fact that stocks in a number of industries are reduced to a very low point; credit is abundant at low interest rates; and there has been a marked rise in the prices of farm products. Another indication of general prosperity may be noted in the increase in department store sales, which were greater during the first six months of this year than during the corresponding period in 1923. Neither must we overlook the fact that there is every indication that the Dawes plan will succeed; this plan, if adopted and carried out, will tend to increase the foreign trade of the United States.

The Machine Tool Industry

So much for the broad indications of a general industrial improvement. In the machine tool industry it is evident that definite signs of improvement will be less marked until production in machine-tool using shops has reached a more normal level. Nevertheless, the month of July showed a slight improvement in new orders over the previous month, and the lowest point in machine tool demand has apparently been passed. The political outlook has, of course, a great deal to do with re-establishing confidence in business, but a return to more active machine-tool buying is expected in the fall. This revival in business would come sooner if the shops using machine tools would employ the present dull season, when both labor and materials are obtainable at as low figures as may be expected for a long time to come, to make their plants ready for future high-pressure work; making all necessary repairs and alterations, and installing such new machine tools as would be required for normal production, even though they may not be urgently needed at the present moment. Many of the automobile plants are doing this, and the steel industry, with the wise and far-seeing policy that has generally guided this business, has made it a rule to place the mills in good running condition during dull periods.

This is also the right time for replenishing supplies of pig iron, steel and other materials. The price of pig iron is not likely to drop any further; in fact, there are already signs of slight increases. The same is true of most other materials. With an increase in demand there certainly will be an increase in price, and the lowest point in demand has already been passed.

The Iron and Steel Industry

Unless there is a reasonable activity in the iron and steel industry there cannot be any great activity in the machine-building fields—hence, in a general way, the iron and steel industry is a fair barometer for the industries that build machinery, and especially machine tools. It is therefore encouraging to record that the orders in this industry are increasing steadily, July showing an improvement in buying over the previous month of from twenty to seventy per cent, and the first weeks in August showing a still greater increase. The manufacturing operations in the steel mills and the volume of output of both pig iron and steel is increasing. Independent plants in the Pittsburg district produced, early in August, at a rate averaging about sixty per cent of capacity, and at the same time about forty-five per cent of capacity was estimated as a fair average for the entire industry. This seems like a low figure, but when it is remembered that operations had been reduced to an average of about thirty per cent, it is, nevertheless, encouraging.

The Automobile Industry

In the machine-tool building and shop equipment field, no news could be more welcome than that automobile production is increasing. While final figures are not available at the present writing, covering the complete production of all plants during July, early estimates place the production at 260,000 cars and trucks, as compared with 245,000 in June. The August schedules in most plants are slightly ahead of the July production, and present indications are that the total production for 1924 will reach 3,500,000 cars and trucks, which constitutes a record production for any year, except 1923. At least five of the larger automobile companies are now running on a production schedule that requires the full capacity of the plants, but the average for the entire industry in the passenger car field is probably about seventy per cent of capacity.

The exports of automobiles are showing a marked increase, breaking all previous records during the first half of this year, and reaching a total of approximately one hundred thousand cars, an increase of about thirty-three per cent over the same period in 1923.

Registrations of passenger cars and trucks in the United States totalled 15,523,898 on July 1, this year. This was an increase of 2,475,770 in the one year since July 1, 1923. There is one motor vehicle for every 7.2 persons in the United States. Of the total, 12.3 per cent represent trucks and 87.7 per cent passenger cars.

The Railroad Situation

There has been an encouraging increase in car loadings during recent weeks, after the decline during the spring and early summer months. The railroads, however, have been marking time in making purchases of shop equipment since the first of the year. They feel themselves in a secure position as far as ability to handle any freight that may be offered, even with an increasing industrial activity and crop movements in the fall. Generally speaking, repairs on cars and locomotives are not being carried out at the present time with the same dispatch as last year, and "bad-order" cars and locomotives are accumulating. This does not seem to be a very far-sighted policy, because generally it has been found best to make repairs and put equipment in order when the demand on the equipment is comparatively slack, and to have it ready when the rush comes.

New Machinery and Tools

The Complete Monthly Record of New Metal-working Machinery

Lees-Bradner Production Gear Generator

RECENT years have witnessed a radical change in the methods employed for the quantity production of gears. In the manufacture of automobile transmission gears and other classes of work where mass production is involved and a high degree of accuracy in both the tooth contour and spacing is necessary, it is believed by many production engineers that the best procedure is first to rough out the teeth and then, after the work has been hardened, to finish them by grinding. Since the introduction of the gear tooth grinder there has been a demand for a hobbing machine adapted to roughing out gear teeth within close grinding limits in a single operation. To meet the requirements of this service, the Lees-Bradner Co., Cleveland, Ohio, has brought out the No. 2 gear generator here illustrated.

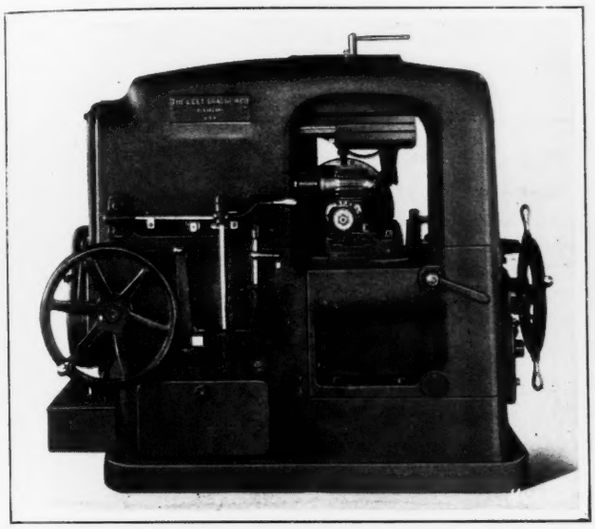

Fig. 1. Lees-Bradner Production Gear Generator

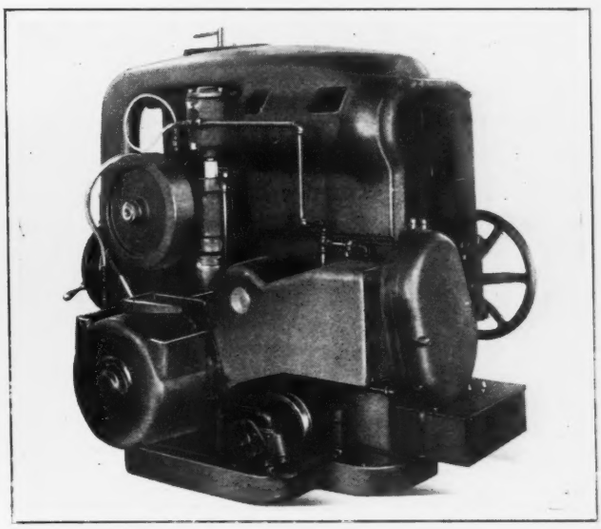

Fig. 2. Rear View of the Lees-Bradner Gear Generator

Rigid Support for the Hob and Work

This generator was designed with the requirements of quantity manufacture in mind, and so special attention was paid to providing means of rigidly supporting the hob and work. Theoretically, correct generating cannot be obtained if there is any freedom for the hob to spring away from its cut, because then there is a tendency for the tops of the hob teeth to wear. The result is a circular arc at the top of the teeth in place of the correct radial relief, and when such a condition begins, the destruction of the hob proceeds with rapidity. To insure rigid support of the hob and work on this generator, there is a housing which arches over the hob and work arbors, both from front to back and from side to side. The construction may be seen plainly in Figs. 1 and 3. It holds the hob and the work in a definite relationship to each other.

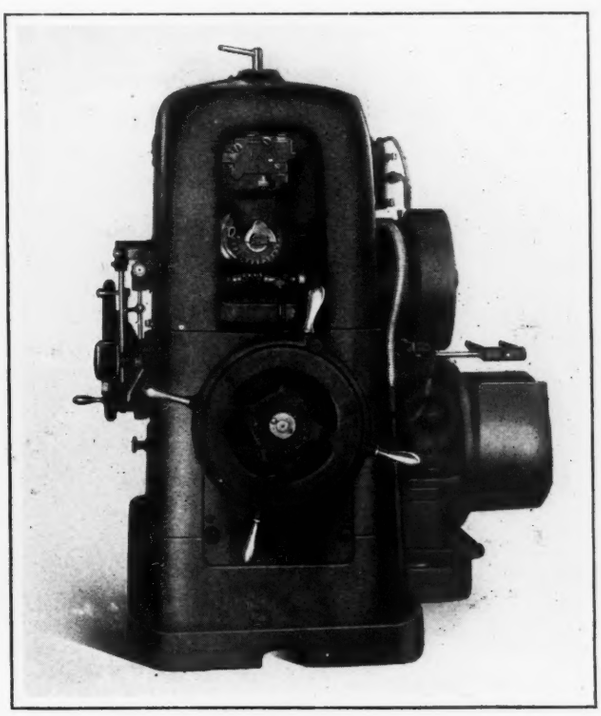

Fig. 3. End View, showing the Rigid Construction

As in previous designs of Lees-Bradner hobbing machines, the hob is held stationary so far as traverse is concerned, the work being fed across the hob. When the cut has been completed, the feed is automatically tripped. Then the operator moves a hand-lever to cause the work to be rapidly returned to the starting position, where it stops. The operator next removes the finished work and sets up a fresh blank, or a stack of blanks, and after tightening the clamping nut, the work is in the exact starting position and it is merely necessary to re-engage the power feed. Provision may be made for either pulling or pushing the work across the hob, whichever is most convenient for the job in hand.

Setting the Hob in Relation to the Work

Another vital point in maintaining a rigid relationship between the hob and the work is to have a solid foundation for the hob and its driving mechanism. On the new machine this has been provided for by a wedge *A* under the saddle that car-

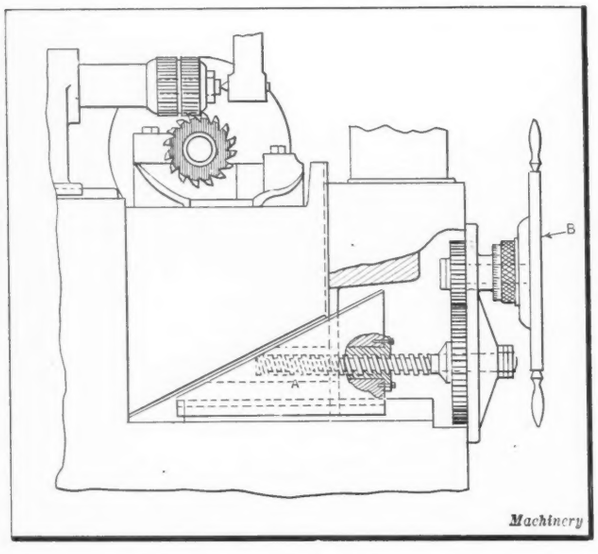

Fig. 4. Hob Saddle and Wedge Construction

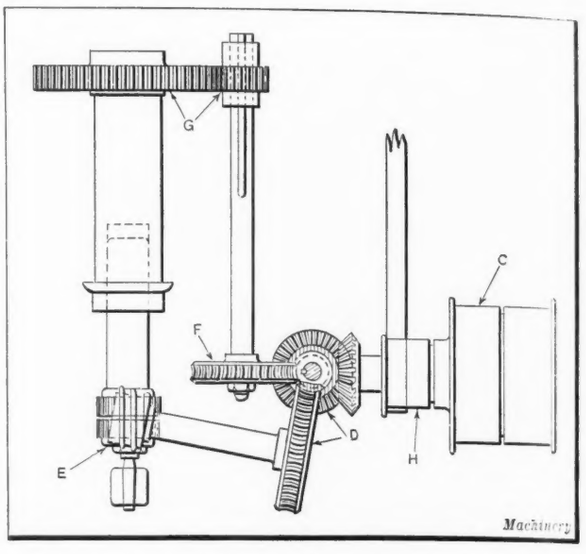

Fig. 5. Illustration showing Simplicity of the Hob and Work Drive

ries the hob, as shown in Fig. 4. The under side of this saddle is tapered to correspond with the wedge. At the front of the machine there is a handwheel *B* furnished with a graduated collar, this handwheel being turned to move the wedge forward or back. In so doing, the wedge raises or lowers the hob saddle and permits the required setting to be obtained. When the setting has been made, binders are operated to lock the hob saddle positively in position.

Design of the Machine

Simplicity of design is especially important in the case of production machines, because failure of one equipment may not only delay production from that unit but may also hold up work in other departments which depends upon the delivery of pieces from the machine in question. That simplicity is one of the features of the Lees-Bradner generator will be seen from Fig. 5 which shows a plan view of the important members of the mechanism. Power is transmitted from pulley *C* through a pair of bevel gears and then through worm and worm-wheel *D* to the hob *E*. To adapt the machine for using hobs of different angles, the table on which the hob-arbor bearings are mounted may be swiveled about the center of the worm. In this way the desired flexibility is obtained without a complicated mechanism. Single-, double-, or triple-thread hobs may be used.

On the same vertical shaft that carries the hob-driving worm, there is a second worm that meshes with a worm-wheel *F* through which power is transmitted to a pair of spur gears *G*. The second gear of this pair is mounted on the work-arbor and provides for rotating the work. Pulley *H* transmits power to the traverse and feed gears which are contained in a case inside the machine.

As this is a single-purpose production machine, it is not necessary to have a selective-feed mechanism, and the same is true concerning provision for different numbers of teeth in the work. However, there is a pair of pick-off gears which may be changed to obtain the desired ratio for the rate of feed required for any given job, and a suitable worm and worm-wheel may be substituted in the drive to the work-arbor to provide for the number of teeth in the gears to be generated.

Provision for Lubrication

Two individual oil-pump and reservoir systems are furnished on the machine, one for lubricating the gears, and the other for delivering coolant to the hob and work. The first tank contains oil from which the supply is pumped to the worm-gears which drive the hob and work-arbors. The worms and worm-wheels are contained in cases, down which the oil flows and then drains back to the tank, a cooling action resulting from the circulation of the oil. Other gears on the machine are contained in oil-tight cases which assure efficient lubrication without circulation.

PRATT & WHITNEY TWO-SPINDLE SEMI-AUTOMATIC THREAD HOBBER

A two-spindle machine designed to perform thread-hobbing and circular milling operations at high rates of production has just been placed on the market by the Pratt & Whitney Co., Hartford, Conn. In thread-cutting operations, a ring hob is used in combination with a lead cam, but in circular milling operations either a formed or straight milling cutter is used without the lead cam. There are two horizontal work-spindles mounted 180 degrees apart in a large drum, which is automatically indexed through one-half of a revolution at regular intervals. A cutter-head at the rear of the machine (see Fig. 3) carries a single cutter which is brought into engagement with the work held by the rear spindle. This

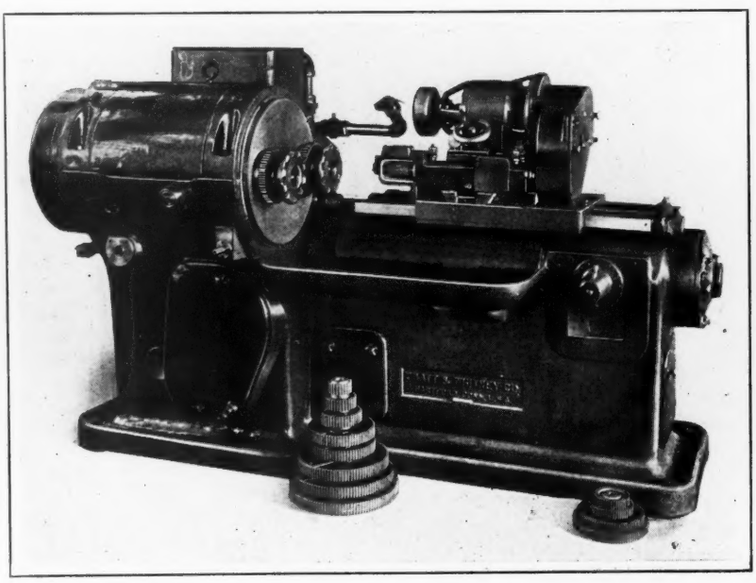

Fig. 1. Pratt & Whitney Two-spindle Semi-automatic Thread-hobber

spindle rotates slowly during both milling and threading operations, and in threading operations only, the cutter-head is moved endwise by the lead cam to give the desired lead to the thread. While the work in the rear spindle is being machined, the operator removes the finished piece of work from the front stationary spindle and inserts an unfinished blank. When the next indexing takes place, the blank is put into the machining position at the rear and the work just finished is brought to the front. Thus the machine is automatic except for loading and unloading.

The machine is equipped with two separate motors of two horsepower capacity, one of which is mounted on the cutter-head for driving the cutter, and the other at the rear of the machine for driving the work-spindles, indexing the drum, rotating the shaft that controls the lead and feed of the cutter, and driving the pump. Power is taken from this motor through gears and silent chains. There is a push-button control for each motor and electrical protection. As the drum rotates either spindle into the cutting position, a gear on the spindle is meshed with a driving gear to rotate the spindle until the cut is finished and the drum again indexed. Twelve change-gears provide six speeds for the rear work-spindle. The spindles have a capacity for work up to 2 inches in diameter.

Both straight and taper bearing surfaces are furnished on the spindle noses to accommodate the collet closing ring or special chucks. A fine-pitch thread is available for special chucks, and a coarse-pitch thread for the collet closing ring. If desired, the machine may be fitted with air chucks, the opening and closing of which is controlled by one valve. Thrust is taken at the front end of the spindles by a hardened and lapped steel washer. Adjustments are made by means of nuts at the rear.

Indexing of the drum is accomplished by means of large worm-gearing connected to the main drive through a friction clutch, which is thrown in and out of mesh by the action of a cam. A positive automatic lock holds the drum in position at both indexing points, and a cam-operated pawl releases the work in either spindle as soon as the cut is finished. The indexing takes about two seconds.

The motor on the cutter-slide is connected to the drum through transposing gears which furnish speeds of 355 and

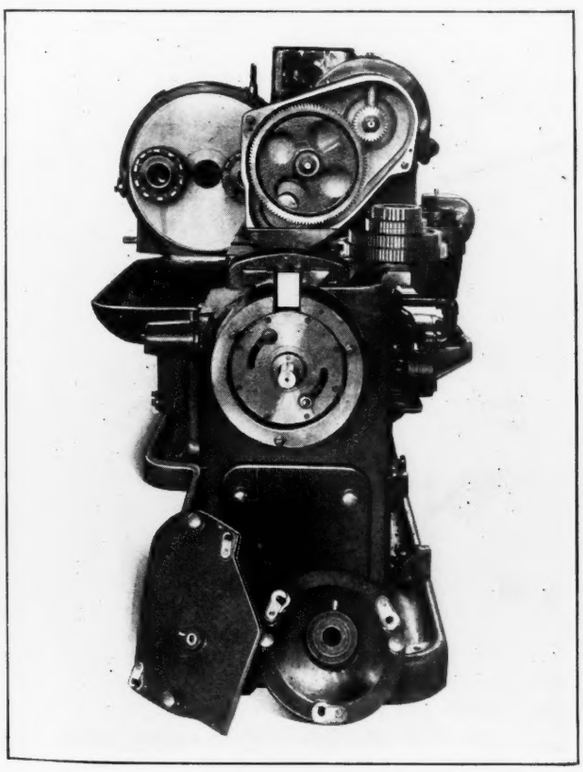

Fig. 2. End View of the Thread-hobber, with the Lead Cam exposed

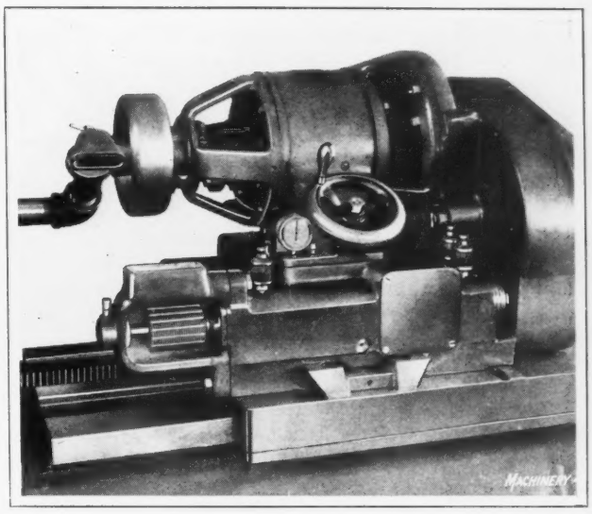

Fig. 3. Close View of Cutter-head and Cross and Longitudinal Slides

485 revolutions per minute. The cover of the housing that contains these gears was removed at the time the photograph reproduced in Fig. 2 was taken. The cutter-spindle is hardened, ground, and lapped, and runs in hardened, ground and lapped steel bushings. The head is mounted on a slide which is so pivoted that the head may be adjusted to compensate for any slight taper of the work due to inaccurate grinding of the hob. The cross-slide is operated by the small handwheel shown in Fig. 3, to set the hob to depth, and the dial indicator permits accurate settings to be readily obtained.

The cross-slide is mounted on a longitudinal slide which, when the machine is used for threading operations, is actuated by a cam follower that is in continual contact with the lead cam already mentioned. This lead cam is located in the right-hand end of the bed, as shown in Fig. 2. The cam consists of a cast-iron core and a hardened and ground ring which is changed for each pitch of thread cut. Under the action of this cam, the cutter-slide moves logitudinally an amount corresponding to the lead of the thread being hobbed, and so the complete thread is finished during one revolution of the work.

There is also another cam device for advancing the cutter-head to the full depth of the thread, and when the cut has been completed, the cutter is automatically released and backed away from the work by spring tension to permit indexing the drum. Thus, the hob is fed longitudinally during the cut, backed away from the work when the operation is completed, returned the longitudinal distance traveled while cutting, and again fed to depth after the next piece of work has reached the cutting position. When the machine is being used for circular milling operations, the longitudinal slide is locked so that in this case, the cutter is simply fed to depth by the cross-slide and returned before the drum indexes. When an exceptionally long cut is taken, the cutter is mounted in a double support, as shown, to keep it rigid, but an outboard support is not required for cuts up to 1¾ inches long. This housing is so designed that the cutter may be continuously flooded with a cutting fluid.

For long work and work that cannot be chucked, the machine may be fitted with tailstocks mounted on a long splined bar. One end of this bar is fastened to the center of the drum and the other end is held in a bushing mounted on a bracket fastened to the right-hand end of the bed. The bar carries a double adjustable tailstock, and the entire mechanism revolves in line with the work-spindles when the drum indexes. Levers provide for setting and locking the tailstock spindles. The mechanism makes the machine available for a large class of work and does not interfere with the use of the machine for ordinary chucked work.

Lubrication is accomplished from centralized reservoirs and by the splash method as far as possible. Coolant is

pumped to a large tank situated at the highest point of the machine, and from there it is brought by gravity to the cutter. The pump is located beside the motor that drives it. The chip pan is so designed that the flood of cutting fluid carries the chips into a settling box within the bed. This box may be easily reached through a door in the rear of the bed for removing the chips. The machine occupies a floor space of 8 feet 2 inches long without the air chucks, and 9 feet 2 inches with the air chucks, by 4 feet 4 inches wide. The height is 5 feet. The maximum swing over the bed is 10 inches, and the maximum length of work accommodated between centers when using the tailstocks, 18 inches.

O. K. GEAR HOBS AND CUTTERS

The principle of using inserted high-speed steel blades in cutting tools has recently been adopted in a novel manner by the O. K. Tool Co., Inc., Shelton, Conn., in the construction of hobs and disk cutters for producing gear teeth of large circular pitch. Stocking cutters for 1½ diametral pitch teeth and coarser teeth up to 5 inches circular pitch, are made with five convolutions, as shown in Fig. 1, each convolution being a separate unit, as illustrated in Fig. 2. The inserted blades are spaced around the periphery of each convolution and on both sides, as shown in Fig. 3. The hob illustrated, which is intended for cutting teeth of 1 diametral pitch, contains 320 blades. The advantages claimed for the design include a higher production rate, longer life of the cutting edges because the blades can be changed individually when they become chipped or worn, and greater uniformity of the cutting edges.

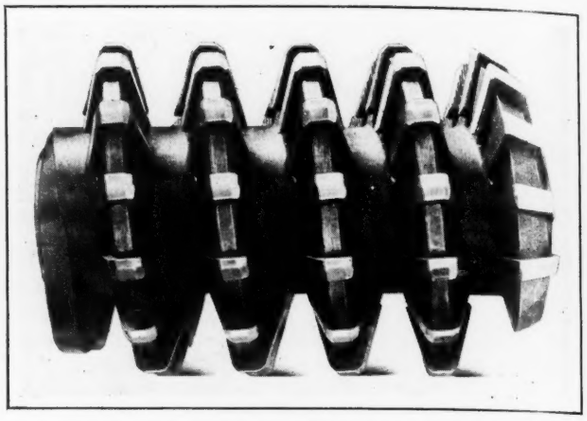

Fig. 4. Hob used for finishing Gear Teeth and for roughing Teeth finer than 1½ Diametral Pitch

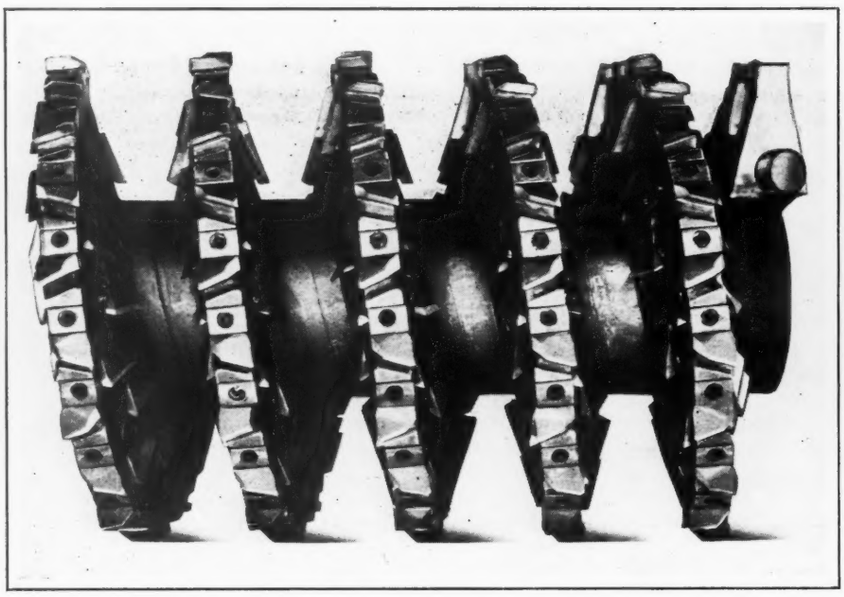

Fig. 1. Stocking Gear Hob with Inserted Blades assembled on Drop-forged Sections

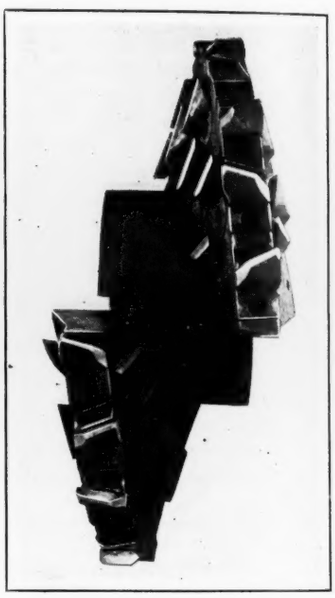

Fig. 2. Section of Stocking Hob

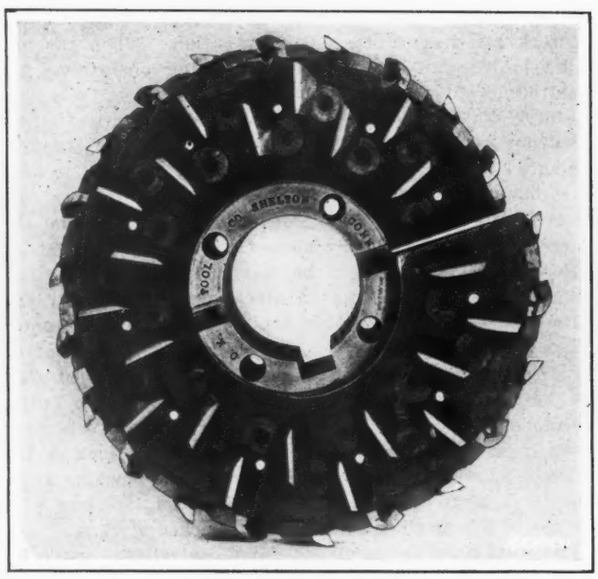

Fig. 3. Arrangement of the Cutters on the Sides of the Hob Sections

The body of the hob consists of five drop-forgings of manganese steel, which are heat-treated to give the required toughness. Each forging is accurately machined to length between the bosses, and the bosses are central with the ends of the convolution. Thus, should the blades of the middle sections become worn more than the blades of the outer sections, or vice versa, the sections may be conveniently interchanged. They are held in alignment by means of side keys and by the ends of the convolutions coming in contact with each other. Four through bolts hold them together, so that they may be keyed as one unit on the cutter-arbor of a machine.

The cutter blades on the periphery of the sections are spaced at alternate angles in such a way that as each blade starts cutting, the chip is thin and gradually becomes thicker. These blades produce a slot with walls at right angles, and the side blades simply widen the walls to the proper shape, the greater portion of the work being done by the peripheral blades. Each blade has a side clearance of 20 degrees and a back rack of 15 degrees to make the cutting action that of a single-point lathe tool.

A shank on each blade is fitted tight into a hole in the body of the hob, and a circular clamp having one side cut

away tapered is assembled into a larger counterbored hole with the taper surface in contact with a corresponding surface on the blade, as shown in Fig. 3. When a screw held in the clamp is finally tightened, the blade is prevented from coming out or shifting, because it is firmly held between two shoulders and against the shank hole. Although the illustrations show square clamps used for securing the peripheral blades, circular clamps are now also supplied, because they can be made thicker than the straight clamps and a more substantial backing wall is obtained. A depression in front of each blade provides adequate room for chips. The blades are ground to size and contour after the hob has been completely assembled. The manufacturer states that when using hobs of this type for large cast-iron gears, the production ranges from 3 to 5 times that obtained by previous methods. The hob is made for both spur and helical gears.

Fig. 4 shows the type of hob made for finishing all sizes of gear teeth of 3 diametral pitch or coarser, and also for roughing all teeth that are finer than 1½ diametral pitch. In this design the body consists of one solid forging in which slots are machined equidistantly around the convolutions to receive the inserted blades. Serrations are provided in the slots to match corresponding serrations on the back of the blades, and the slots are cut at an angle of 5 degrees. The taper prevents the blades from coming out, while the serrations hold them from shifting sidewise. The blades are ground at an angle to radial lines extending from the center of the body, instead of being ground radially, which is also true of the stocking hob and the other cutters. In resharpening, the blades are ground on the top and sides only and never on the face.

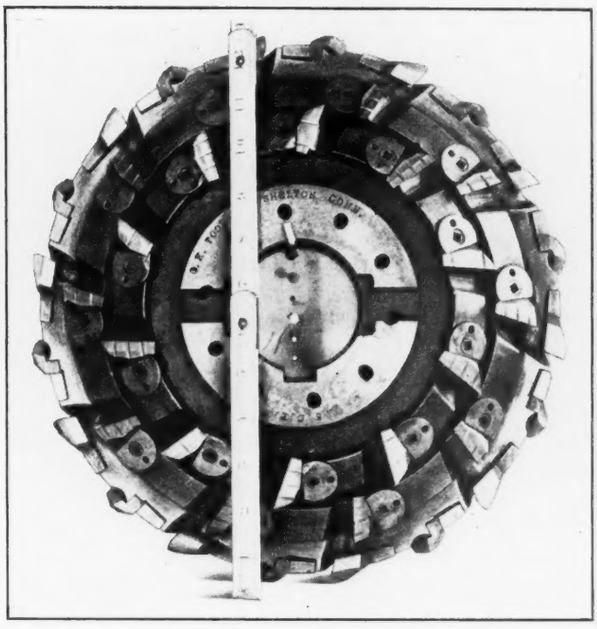

Fig. 5. Gear Disk Cutter with Inserted High-speed Steel Blades

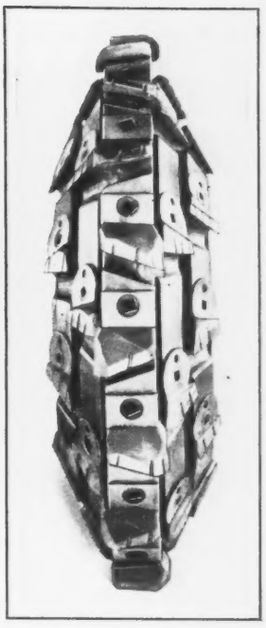

Fig. 6. End View of Cutter

The disk cutters referred to are made for use in shops not equipped for using the hobs described. Figs. 5 and 6, respectively, show side and end views of a stocking disk cutter. It will be seen that the arrangement of the blades is similar to that of the stocking hob. However, the blades are provided with notches to break up the chips produced. The finishing disk cutter is similar in design to the stocking cutter, but it has three rows of blades on the sides and no peripheral blades, the upper rows of side blades rounding the corners at the root of the gear teeth.

COLBURN LOCOMOTIVE-ROD BORING MACHINE

A machine intended primarily for boring the side rods of locomotives, but which may also be used for a large variety of work on account of the quick adjustment of the heads to any position and the number of feeds and speeds available, has recently been brought out by the Colburn Machine Tool Works, Rochester, N. Y., of the Consolidated Machine Tool Corporation of America. It may be used for simultaneously drilling, boring, facing, reaming or tapping two holes, or for performing a given operation under one spindle and another under the second. There are eight speeds and six feeds for each spindle.

If desired, a tapping attachment may be applied to either head, and for very heavy boring and tapping a tapping hood is recommended. Each spindle has an independent motor drive which travels with the head. These motors also furnish power for moving the heads longitudinally. The driving and feeding gears run in oil, and the driving shafts and spindles are equipped with ball bearings. An adjustable

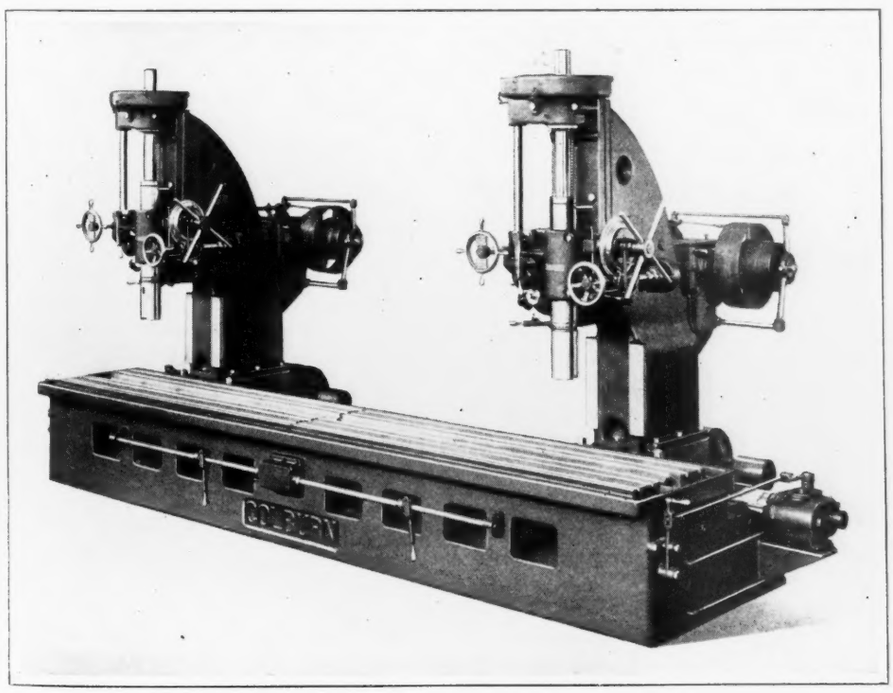

Colburn Locomotive-rod Boring Machine

steady support for the lower end of each spindle and a cutting compound pump are supplied, although they are not shown on the machine illustrated. The spindle drive, feed mechanism, etc., are the same as used on the regular D-8 machine built by the same company.

Two levers at the front of the bed provide for close adjustment of the columns and levers at the ends are manipulated to traverse the columns. Some of the principal specifications are as follows: Drilling capacity in solid steel, 5 inches; boring capacity, 15 inches; swing, 36 inches; working surface of table, 28 by 173 inches; vertical travel of spindles, 18 inches; maximum distance from nose of spindles to table, 30 inches; and weight, about 35,000 pounds.

PRATT & WHITNEY VERTICAL SHAPER

The 6-inch vertical shaper built for a number of years by the Pratt & Whitney Co., Hartford, Conn., has been redesigned and is now being placed on the market as model B. As shown in the illustration, the shaper consists of a bed on which is mounted a rotary work table and a column which supports a vertical ram and contains the ram actuating mechanism. There is an angular adjustment for the ram which is valuable in die-cutting and similar operations.

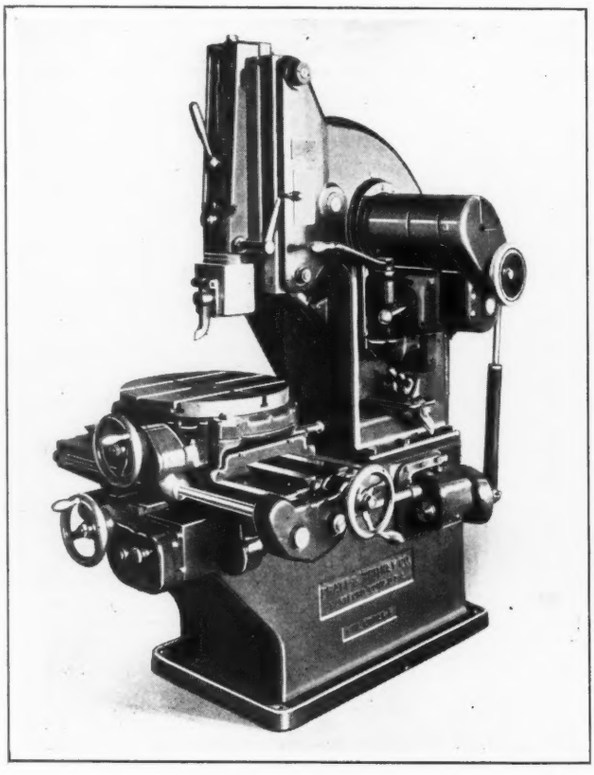

Pratt & Whitney Redesigned Vertical Shaper

The new model is designed for either a built-in motor drive or a single-pulley belt drive. In either drive the main pulley rotates at a constant speed of 450 revolutions per minute. With the motor drive, a 3-horsepower motor is mounted inside the bed where its position is too low to cause vibration and where it does not collect chips and dirt. Power is delivered from the motor to a large friction pulley at the side of the machine. In a belt drive this same pulley is connected to the lineshaft, making it a simple matter to change the drive at any time. The friction clutch of the driving pulley is operated by means of a lever at the right of the ram, which controls the motion of the machine at all times. There are three positions for this lever, a working position, a neutral position and a third position in which a brake is applied for stopping the ram quickly.

A feature of the shaper is a gear-box on the right-hand side of the column which provides a selective drive to the ram. Four speeds and a neutral position are available by operating an H-type shifting lever. Power is delivered from the gear-box to the ram through a slotted eccentric and a follower block which produce a slow power stroke and a quick return motion. The ram is counterbalanced.

The ram and its slide form a separate unit on the front of the column. The slide is hinged at the top and has a screw adjustment at the bottom, this construction permitting the entire unit to be swung to any angle up to 5 degrees and locked in position. With this design the machining of angular surfaces of dies can be conveniently performed. There is a scale which facilitates setting the ram to the desired angle, and it is returned to the true vertical position without the necessity of an additional adjustment. A handwheel on the gear-box permits of moving the ram through its entire travel for positioning it at the start of a cut. Any vertical position of the ram on its slide is obtained through a crank-handle which actuates a vertical screw and nut. A binder handle is used to lock the ram in position. The length of the ram stroke is variable from zero to 6½ inches by means of an adjustment on a feed-cam. The four speeds obtained from the gear-box give 33, 49, 76 and 116 ram strokes per minute.

The feed cam is located on the upper right-hand side of the column and driven by an extension of the shaft from the speed gear-box. It provides a power feed for the entire machine. A side cam with a single rise is used which functions once for each stroke of the ram. The cam follower actuates a bellcrank by means of which the feed is supplied through a rocker motion at the end of the stroke. The lever which connects the bellcrank with the feed-box is adjustable on the crank so as to permit varying the amount of feed. This lever consists of a sleeve containing a plunger and spring. The spring is stiff enough to transmit power under regular working conditions, but should the work or tool become jammed, the plunger will simply pump up and down against the spring and no harm will result. The feed gear-box is located on the right-hand side of the bed directly below the feed-cam. A notched wheel and a double pawl receive the rocker motion delivered by the connecting-rod and change it to an intermittent rotary motion. The feed-box provides forward and reverse drives and a neutral position. It is controlled through a push- and pull-knob on the front of the bed.

The toolpost is carried in a clapper so mounted that the thrust of the cut forces it rigidly against the head. This clapper permits the tool to clear the work on the return stroke and thereby prolongs the life of the cutting edge. The tool is held by drawing the post against it from the back, this design eliminating the toolpost binder screw and permitting the toolpost to pass over the work. The tool-head may be rotated through a full 360 degrees and clamped in any position. The rotary table is provided with twelve indexing notches for quick indexing to 1/2, 1/3, 1/4, 1/6 and 1/12 of a complete circle. Power feeds for both the longitudinal and transverse slides are furnished as regular equipment, these feeds being controlled by means of slip-gears. A rotary power feed may also be furnished for the table as illustrated. The machine weighs about 4550 pounds.

HILLIARD CLUTCHES AND COUPLINGS

A recent improvement has been made in the line of high-speed friction clutches and cut-off couplings manufactured by the Hilliard Clutch & Machinery Co., Elmira, N. Y. This consists of the use of gear teeth on the driving and driven plates, as indicated at *A* and *B* in the accompanying illustration, which shows a clutch. The same construction is employed in the cut-off couplings. This design is now furnished for all high-speed installations running at 1000 revolutions per minute or more, and is particularly adapted to use in centrifugal pump and generator service at 1200 revolutions per minute.

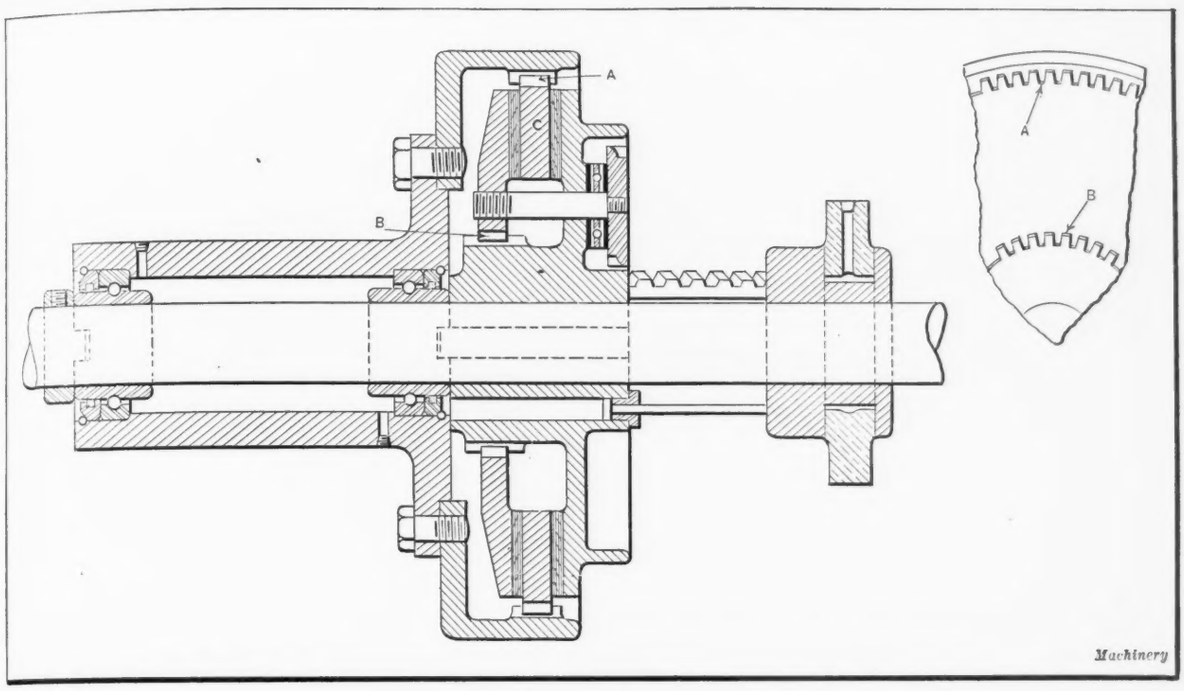

Hilliard Improved Friction Clutch

For low-speed work the standard construction is used in which there are four slots in the housing member and four corresponding lugs on the driving plate, as well as on the driving ring, which mesh in the four slots of the housing member. However, for high-speed installations, a lower coefficient of friction must be used in order that the clutch may be indefinitely run released at high speeds. Hence, two woven clutch facings, similar to automobile brake banding, are used. These facings are riveted to the metal friction plate *C*. The gear tooth construction is said to insure concentricity, prevent vibration, furnish maximum wearing surface, and do away with the wear that usually occurs when keys or slots are employed for those members. In other details the clutches and cut-off couplings are similar to those described in September, 1921, MACHINERY.

WALLACE BENDING MACHINES

A model No. 8 power-driven machine for bending pipe, tubing, conduit, reinforcement bars and structural angles, channels and tees, etc., has been developed by the Wallace Supplies Mfg. Co., 1310-12 Diversey Parkway, Chicago, Ill. The machine operates in both directions and is, therefore, capable of making right- and left-hand bends in reinforcement bars. However, pipe and structural angles, etc., can be bent only to one hand because of the tool equipment necessary, and so in making a reverse bend, these materials must be reinserted from the opposite end.

The machine is shown equipped with a form for making a 90-degree bend in a 4-inch diameter pipe but work can be bent to angles greater than 90 degrees either by resetting the material in the form and putting it through repeated operations, or by equipping the machine with a form corresponding to the number of degrees of bend wanted. The form is secured to the head of the machine and thus rotated with it. One end of the pipe is clamped to the form by employing an eccentric lever which has a bearing against a floating-block shaped to fit the pipe. This design admits of easily slipping the pipe out of the clamp when the bend has been completed.

Interposed between the form and the back pressure rollers is a floating follower bar that is employed to support the walls of the pipe at the point of bending and to prevent flattening of the pipe by any direct pressure of the rollers. This follower bar is grooved to fit the pipe. The rollers can be easily moved backward and forward within a range of 24 inches to suit various sizes of forms, follower bars or other tool equipment.

At approximately the center of the main worm-gear is a movable stop-block that serves as a "knock-out" for the clutch mechanism. It can be set at any predetermined point on the flange of the worm-gear to automatically stop the machine when a part has been bent to the desired number of degrees. Forms can be furnished to produce bends of any number of degrees and to any radius from 4 inches with 1¼-inch pipe, to 24 inches with 4-inch pipe. Radii as great as 36 inches may be obtained by altering patterns. The weight of this machine is about 8000 pounds.

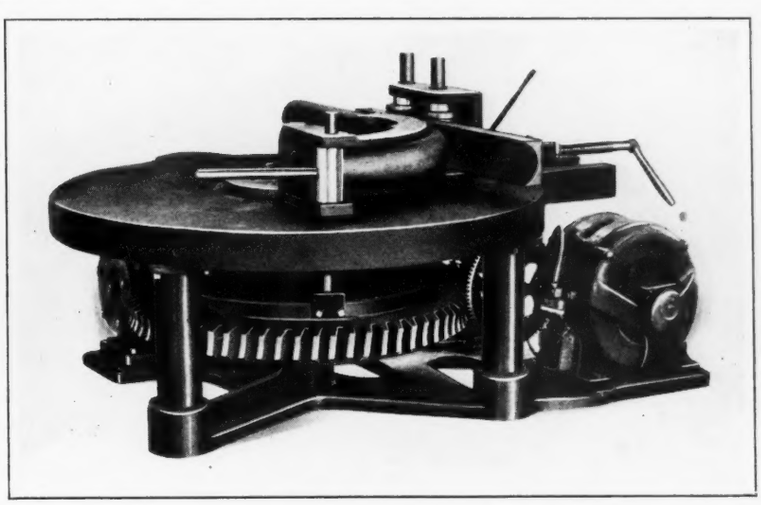

Fig. 1. Wallace Power-driven Bending Machine for Pipe, Structural Steel Sections, Etc.

The same company has also brought out the angle and eye bending machine which is shown at the left in Fig. 2 equipped with dies for bending round or flat bars around a pin. This set-up is suitable for producing offset or central eyes, hinge-shaped eyes, hooks, and S- and U-shapes, etc., and also for producing angular bends, if only a

small radius is wanted at the bend. The stationary back die is held by a clamp on a supporting bracket on the outer edge of the machine, and the holder for the grip dog is near the outer edge of the rotating table. This construction permits the use of forming pins large enough to produce eyes 2½ inches in diameter of bends having a radius up to 1¼ inches. Larger eyes and radii can be obtained by means of special equipment.

The right-hand view in Fig. 2 shows the machine set up for making sharp right- or obtuse-angle bends. The stationary back die is simply reversed and the tool-holder, instead of having a gripping blade as before, is provided with a rectangular die. Also, in place of the forming pin, an "angle die" is fastened to the rotating table. There is a movable gage at the left-hand side of the machine for gaging the stock to be bent and there is also a movable stop-block which acts as a gage for the number of degrees wanted in the bend. The weight of this machine, including the pedestal, is about 180 pounds.

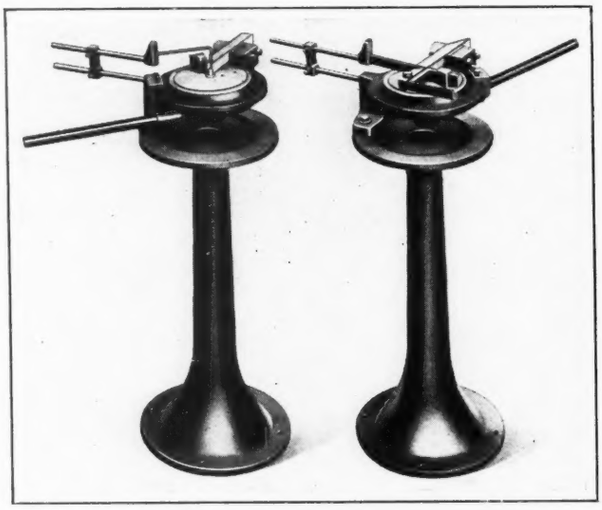

Fig. 2. Combination Angle and Eye Bending Machine

BAKER CAM-FEED DRILLING AND BORING MACHINE

Drilling, boring and facing operations can be performed at high production rates on a drilling machine equipped with a cam feed which has recently been brought out by Baker Bros., Inc., Toledo, Ohio. The machine is especially adapted to facing operations as the cam can be designed to feed the cutter to the required depth, then dwell long enough to completely clean up the surface and finally quickly withdraw the spindle. In a like manner, intermittent drilling and boring can be done by designing the cam so as to automatically give a rapid advance to the spindle between the holes to be machined.

Both hands of the operator are free at all times for removing and chucking work. Many pieces can be held between stops by hand to keep them from revolving, and in such instances the handling time is reduced to a minimum. Fig. 1 shows the standard machine, and Fig. 2 a special machine furnished with two spindles for boring connecting-rods. One spindle is adjustable vertically to compensate for tool grinding. The machine is also built with a circular full-automatic indexing table. Feeds and speeds are furnished special for each machine. The capacity for drilling through solid steel with a high-speed drill is 1½ inches. Other principal specifications are as follows: Distance from center of spindle to face of lower frame, 10 inches; floor space required, with a belt drive, 28 by 36 inches and with a motor drive, 27 by 57 inches; height of machine, 87 inches; and weight of belt-driven machine, 2550 pounds. The standard maximum distance from the end of the spindle to the table is 22 inches, but this dimension can be increased to meet requirements.

"MECHANICS" PRODUCTION DRILLING MACHINE

An all-geared self-oiling drilling machine of 24-inch capacity and equipped with controls arranged conveniently so as to enable rapid production, has been added to the line

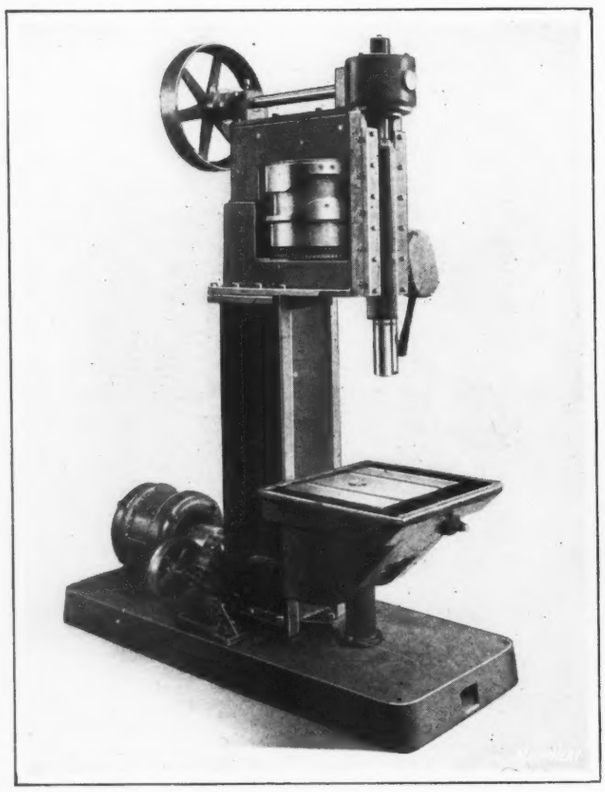

Fig. 1. Baker Drilling and Boring Machine equipped with a Cam Feed

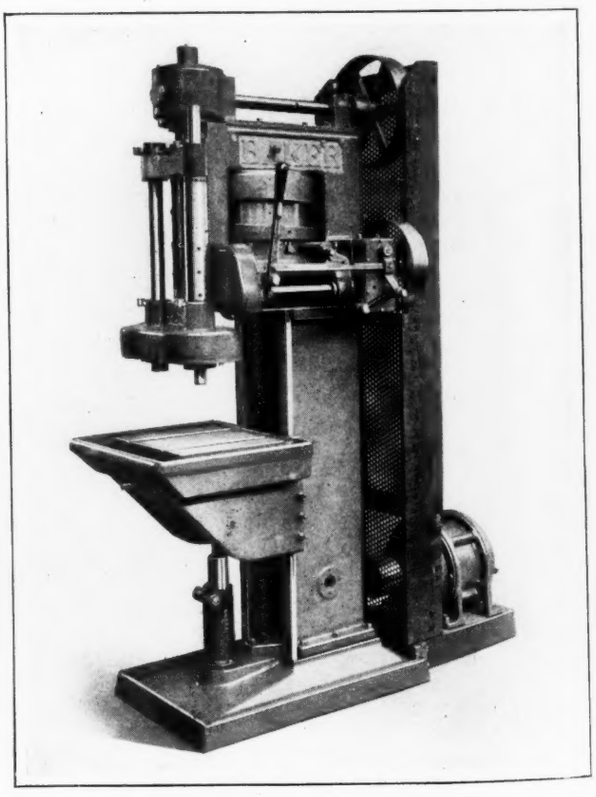

Fig. 2. Two-spindle Cam-feed Machine for Connecting-rods

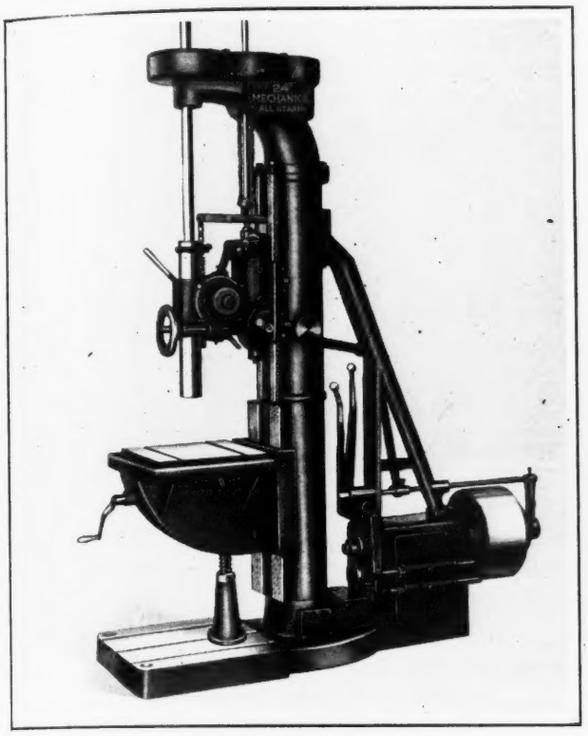

"Mechanics" All-geared Self-oiling Drilling Machine

of "Mechanics" drilling machines built by the Rockford Machine Tool Co., 2400 Kishwaukee Road, Rockford, Ill. It is equipped with a sliding head and swivelling table support that give maximum range with minimum floor space. When desired, a geared tapping attachment, thread leading feeds, rapid approach or return to the spindle, or full automatic features may be furnished.

The speed-change gear-box is cast integral with the base so as to keep the bulk of the net weight close to the floor and furnish a rigid support for the mechanism. This box contains nine heat-treated gears which give a similar number of speed changes. All bearings are equipped with removable bronze bushings which are self-oiling, and the gears run in oil. The speed changes are made through two levers on the speed-box. Power is transmitted from the speed-change box to the feed mechanism and the spindle through a vertical shaft encased by the column and equipped with a ball thrust bearing for supporting it. At the upper end of this vertical shaft is a spur pinion which drives the spindle gear, and an idler which in turn drives the feed mechanism.

Ten spindle feeds are obtained through a feed-change box which is embodied in the sliding head. The feed is transmitted to the spindle sleeve through a wide heat-treated rack and a pinion driven by worm-gearing. The latter is continuously in mesh. An automatic stop is used to drill to predetermined depths. The rapid-approach and quick-return handle is located at the left of the operator. It instantly releases the feed when touched and engages it again when released, allowing a mechanical control of the feed and spindle.

An all-geared positive tapping attachment that is used in conjunction with the thread-lead attachment, can be supplied for any pitch of thread. When the machine is belt-driven, a wide-face pulley of the friction-clutch type is furnished, and when motor-driven, a 2-horsepower motor is mounted on the back of the speed-box off the floor. The gear which meshes with the motor pinion incorporates a friction clutch that is controlled from the position of the operator. A pump, piping and reservoir may be installed with the pump driven by belt from the first speed shaft.

NEWTON LOCOMOTIVE-ROD BORING MACHINE

The heavy-duty duplex locomotive-rod boring machine built in the past by the Newton Machine Tool Works, Twenty-third and Vine Sts., Philadelphia, Pa., of the Consolidated Machine Tool Corporation of America, and described in May, 1919, MACHINERY, has recently been redesigned. The standard machine is equipped with a plain table, but there may be an extended cross-rail and an auxiliary drop table at one end of the bed as illustrated. This drop table has a 4-inch in-and-out adjustment which adapts the machine to boring and reaming taper holes in crossheads. Each spindle is operated independently and driven by a separate motor through back gears and a bronze spiral gear ring which meshes with a hardened steel pinion.

When the machine is arranged for a constant-speed motor drive, twelve speed changes are provided by using a six-change gear-box in conjunction with a two-speed spindle head. Six feed changes are obtained with pick-off gears of even ratio through a six-change gear-box. Additional feeds may be obtained by means of extra pick-off gears. In addition to a hand adjustment and power down feed for the spindles, there is a power quick-return through a friction clutch operated by the same lever that engages the feed.

The spindle saddles are independently adjusted through the large handwheel, and when positioned are clamped to the cross-rail by a special form of binding gib that is adjusted by three bolts from the front. A 1-inch pin extends 1 inch below each head central with the spindle. On this pin is scribed a center line that facilitates adjusting the heads to exact centers by using either fixed gages or trams used in laying off the rods.

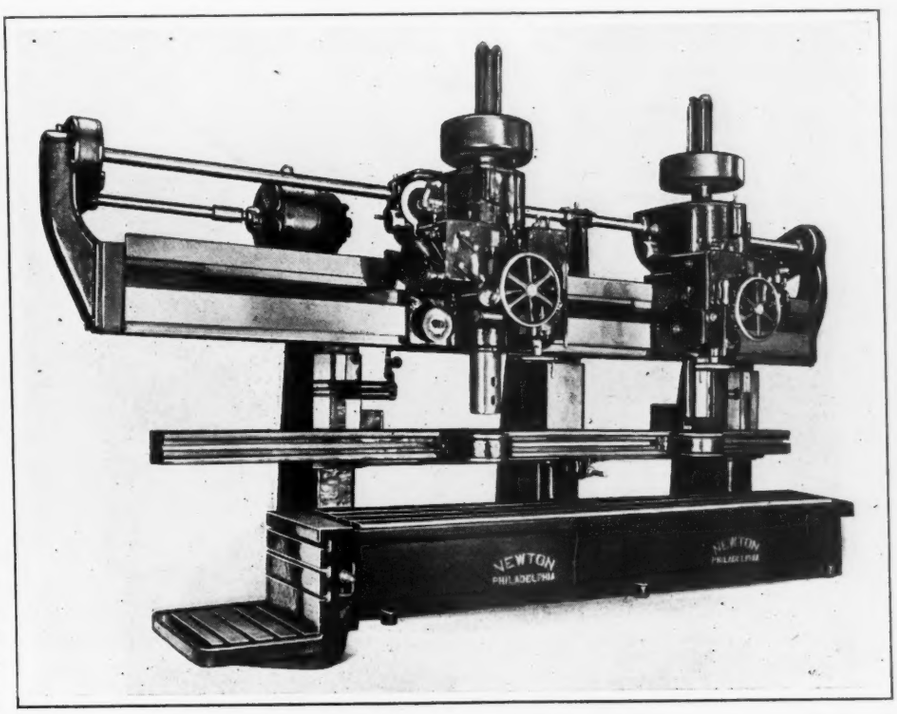

Newton Duplex Locomotive-rod Boring Machine

Both intermediate spindle supports and lower arbor supports are included in the standard equipment. However, the intermediate support illustrated is of a special design. The standard one is in the form of an angle-plate, bolted and dowelled to the saddle, and rests against the under side of the cross-rail. When the spindle is positioned the intermediate support is clamped to the cross-rail by means of T-bolts. A slot is machined in the center of the table into which are fitted two bushings which provide the lower supports for the boring-bars. These bushings are adjustable the full length of the table. An auxiliary work-table may be furnished to facilitate the reaming of cross-heads, etc. All operating parts, with the exception of the driving shaft on top of the machine and the spindles, are enclosed. With a constant speed motor drive two 15-horsepower motors running at 900 revolutions per minute are required, and with a variable speed motor-drive two motors of the same capacity, but running at speeds ranging from 400 to 1600 revolutions per minute, are employed.

UNIVERSAL "TRI-WAY" BORING MACHINE

Several years ago a horizontal boring machine termed the "Original Tri-way" was brought out by the Universal Boring Machine Co., Hudson, Mass. The name was adopted because the bed is provided with three flat ways, the front and center ways serving as guiding surfaces for the sliding members on the bed, and the rear way helping to support the carriage. This machine was equipped with a 4½-inch boring-bar. It was described in January, 1922, MACHINERY. A machine of smaller size, but which closely follows the design of the machine previously described, is now being introduced on the market by the same company. It is equipped with a 2½-inch boring-bar. A feature of the machine is the centralization of controls at the right-hand end.

Twelve spindle speeds ranging from 16 to 650 revolutions per minute are available, and there are nine feeds in either direction for the cross-feed to the table, the longitudinal-feed to the carriage and the vertical-feed to the head. Milling feeds range from 1 to 12 inches per minute, and boring feeds from 0.03 to 4.8 inches per minute. For convenience to the operator, the different positions of the handles for obtaining the various spindle speeds and the various milling, carriage and bar feeds, are all given on one combination speed and feed plate. This plate, which is illustrated in Fig. 2, is attached to the front of the head where it can be readily observed. A 5-horsepower motor running at 1200 revolutions per minute is recommended for driving.

THE "ORIGINAL TRI-WAY" WITH 2½ INCH BORING BAR

SPINDLE SPEEDS			FEEDS INCHES PER MINUTE				
HANDLE	HEAD GEARS		HANDLE	MILLING	CARRIAGE	BAR FEED	
POSITION	SLOW	FAST	POSITION	FEED	FEED	SLOW	FAST
1-A	16	120	1-A	1.0	.4	.03	.4
1-B	23	170	1-B	1.4	.6	.04	.6
1-C	32	240	1-C	1.9	.8	.05	.8
2-A	44	325	2-A	2.7	1.0	.07	1.0
2-B	63	470	2-B	3.6	1.4	.09	1.4
2-C	87	650	2-C	4.8	1.9	.12	1.9
THROW OUT MAIN CLUTCH			3-A	6.6	2.7	.17	2.7
WHEN CHANGING SPEED			3-B	9.0	3.6	.23	3.6
DRIVE PULLEY RUNS			3-C	12.0	4.8	.30	4.8
305 R. P. M.			HAVE FEED LEVER AT CENTER WHEN CHANGING				

UNIVERSAL BORING MACHINE CO., HUDSON, MASS., U.S.A.

Fig. 2. Combination Speed and Feed Plate on Boring Machine

Some of the principal specifications of this machine are as follows: Travel of main boring-bar, automatic, 20 inches and by resetting, 36 inches; over-all dimensions of table, 20 by 42 inches; power cross-feed of table, 32 inches; power longitudinal-feed of carriage, 24 inches; power vertical-feed of head, 20 inches; maximum distance from table to center of bar, 21½ inches; maximum distance from faceplate to outer support, 48 inches; size of bed over-all, 106 by 34 inches; and shipping weight, about 10,500 pounds.

The machine is regularly equipped with a plain extension boring-bar that is 50 inches long over-all and provided with a No. 4 Morse taper at one end, the same as the main boring-bar. In addition to the equipment illustrated, the machine may be furnished with a single pulley that incorporates a friction clutch, for a belt drive; special beds to take work 60 or 72 inches long between the faceplate and the outer support; a special table 26 by 52 inches and provided with a 42-inch power cross-feed; a rotary table 20, 24 or 30 inches in diameter; or an auxiliary table 43 inches long by 6 inches wide and provided with a T-slot. Star-feed facing heads, face milling cutters, special boring-bars and boring heads may also be supplied.

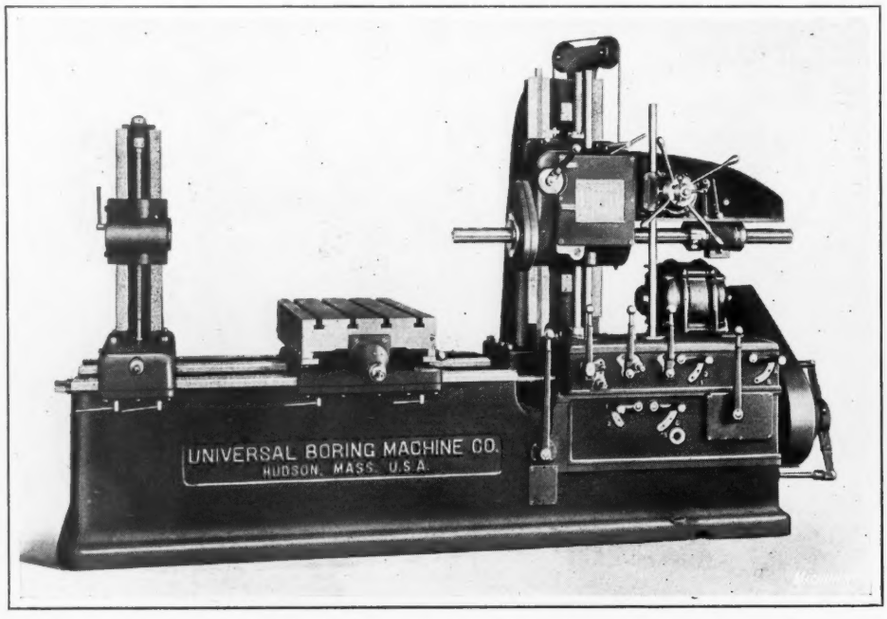

Fig. 1. Universal "Tri-way" Horizontal Boring Machine of New Size

LINCOLN ARC-WELDED MOTOR

Arc welding is employed extensively in manufacturing an electric motor that has recently been brought out by the Lincoln Electric Co., Coit Road and Kirby Ave., Cleveland, Ohio. For instance, the end frame *A* is made by rolling a standard steel angle into a circular shape and then joining the ends by arc welding. Feet *B* are drop-forgings welded to the frame, and blowers *C* are welded for ventilating purposes to the rotor or armature. Lastly, the cutter rods or windings *D* of the rotor are welded to the short-circuiting rings to prevent any loosening or leakage of current at this point.

One main advantage claimed for the design is that the same strength of parts is obtained with less weight. For instance, the end frame is much thinner in cross-section than the casting formerly required. This results in more ventilating space between the frame and the coils. The steel frame can at the same time be hot-riveted and drawn up tighter without breaking.

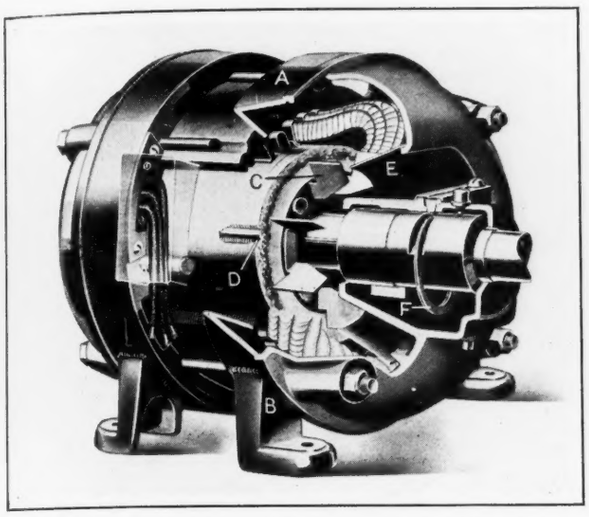

Lincoln Motor largely constructed of Steel Sections arc-welded together

Arrow *E* refers to a deflector which directs the air current, and arrow *F* to an oil-ring which dips into a large well.

TORRINGTON SWAGING MACHINE

A swaging machine designed primarily for use by manufacturers of optical goods has recently been built by the Torrington Co., 57 Field St., Torrington, Conn. This machine is especially intended for use in making spectacle bows and frames, and it produces the reduced portion of bows at the rate of from 6 to 10 per minute. Gold-filled

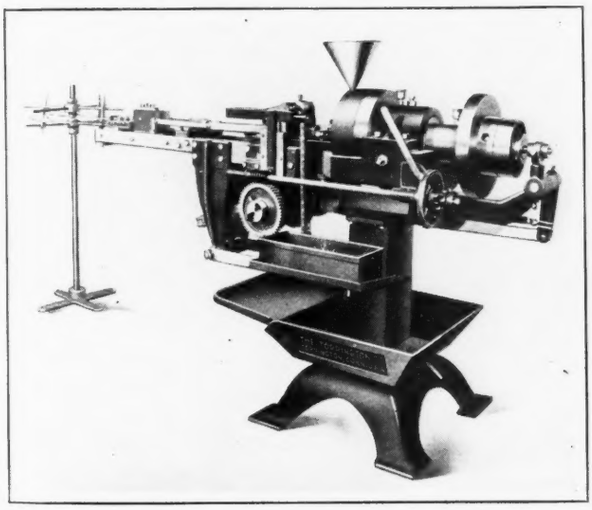

Torrington Swaging Machine

wire, 0.065 inch in diameter, is used and reduced to 0.0395 inch in one operation.

The wire is fed from a coil through a roll straightener, swaged, and cut off to length, all this being accomplished automatically. There is an adjusting means for cutting the wire to any length between 1¾ and 3¼ inches. There is also an adjustable feature for governing the amount of reduction. Oil may be delivered to the swaging head by a rotary pump or permitted to drip on the work from a pipe connected to a small oil tank mounted on the head. The weight of the machine is approximately 1200 pounds.

"THREE-IN-ONE" WORK CLAMP

Three distinct methods of holding down work on machines are employed in the line of clamps and T-bolts recently brought out by the O. K. Tool Co., Inc., Shelton, Conn. First may be mentioned the regular U-clamp, with the bolt located in the U-slot. This slot is of such length that the bolt can not be located past the center of the clamp. In the second method, the bolt is inserted through the short closed slot, and the round knob on the same end of the clamp is inserted in a hole in the work. This slot is long enough to permit the knob to be slid in and out of the work without removing the clamp and bolt.

In the third method of holding work, the angular side of the washer is in contact with the top of the clamp, so that the clamp is inclined at an angle of about 30 degrees from the horizontal. In this way, the nut and bolt are brought beneath the top of the work, and do not interfere with the cutter, as, for instance, in milling machine operations. With this method, a block should be placed beneath the outer lower end of the clamp. The clamp is finish-ground on top. On the lower side the two ends are rounded to insure a good contact on the surface being clamped. The clamp is made in ⅝ and ¾ inch sizes, and the T-bolt in sizes ranging from ½ to ⅞ inch, and to any length.

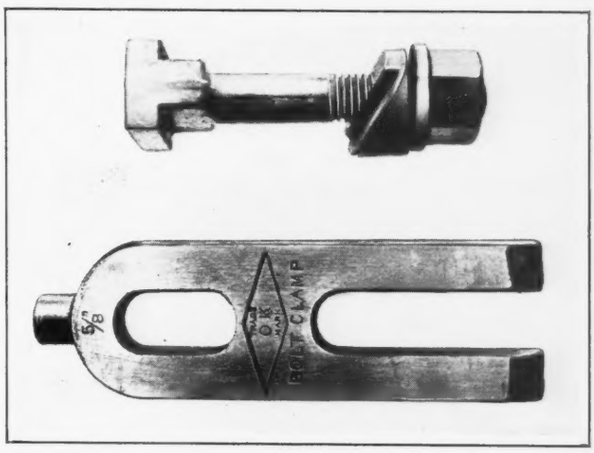

"Three-In-One" Work-holding Clamp

HILL SPUR-GEAR SPEED TRANSFORMER

A spur-gear speed transformer designed for general industrial use under continual or heavy service, as in conveyor drives, has been placed on the market by the Hill Clutch Machine & Foundry Co., N. E. cor. Breakwater Ave. and W. 65th St., Cleveland, Ohio. This transformer consists of a nest of spur gears revolving in oil, which changes the number of revolutions per minute of the input shaft to a desired number of revolutions per minute of the output shaft. All teeth are cut to the 20-degree involute form.

There is a central housing in the main frame which permits of supporting both high- and low-speed shafts in double bronze bearings. A feature of the unit is that it is readily

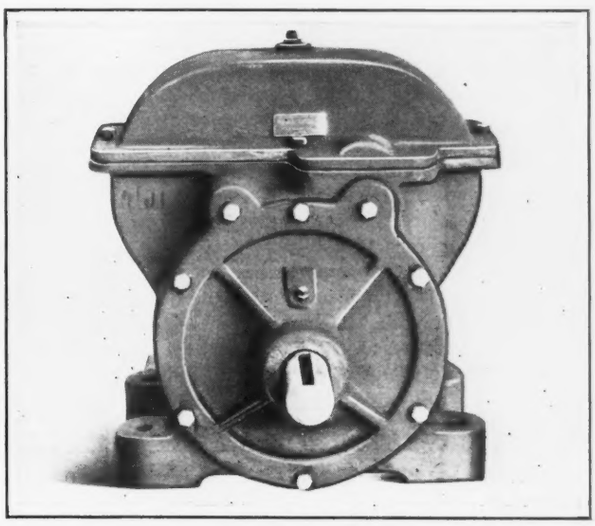

Hill Spur-gear Speed Transformer

accessible because the cap and both ends can be quickly removed. A continuous splash system of lubrication is obtained by means of a metal disk on the high-speed shaft which serves to automatically lubricate every gear and bearing in the case. The high- and low-speed shafts are in the same axial alignment and revolve in the same direction. This speed transformer is built in seven sizes.

VAN NORMAN DUPLEX MILLING MACHINE

A new No. 10 duplex milling machine which is now being introduced to the trade by the Van Norman Machine Tool Co., Springfield, Mass., is here illustrated. This machine has the same capacity of slides as the No. ½ milling machine built by the same company, but it has increased cutter power and capacity. It is equipped with a cone drive which is connected through a pair of bevel gears to a change-gear mechanism at the forward end of the ram. These gears run in oil and to insure that the oil will be kept at the proper

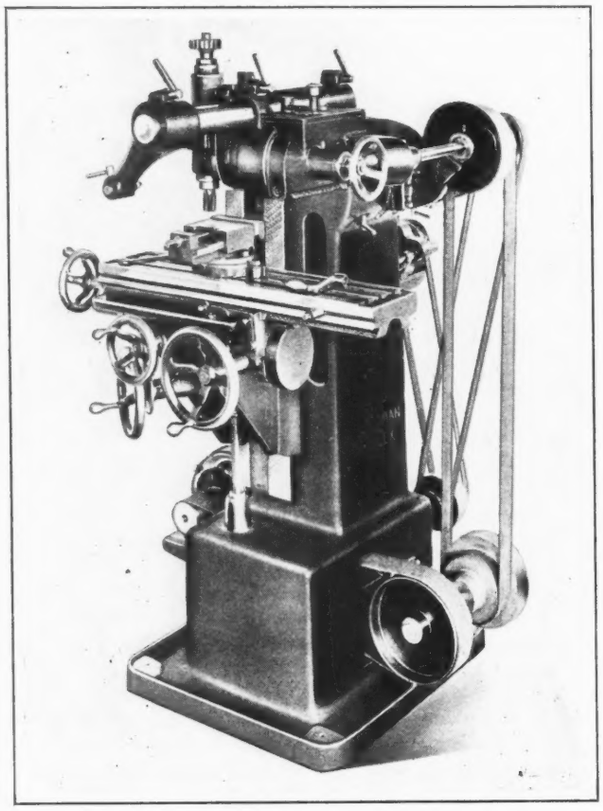

Van Norman Duplex Milling Machine

level, a sight glass is provided in the face of the ram. The machine has all other features of Van Norman duplex milling machines, such as the adjustment of the cutter-head from the vertical to the horizontal position, and the in-and-out movement of the ram over the table.

The illustration shows the method of applying a motor drive by mounting the motor on a bracket on the left-hand side of the column and running the driving belt through the base to a countershaft on the opposite side. A cone pulley in this countershaft is connected by belt to the driving cone pulley above. The table on the machine is 30 inches long and is provided with a 20-inch automatic longitudinal feed and a 6-inch cross-feed. It has a vertical movement of 16 inches. The weight of this machine is about 1650 pounds.

NOBLE & WESTBROOK MARKING DEVICE

Numbers, trademarks, names, etc., may be automatically marked in one operation on cylindrical parts by means of a device recently developed by the Noble & Westbrook Mfg.

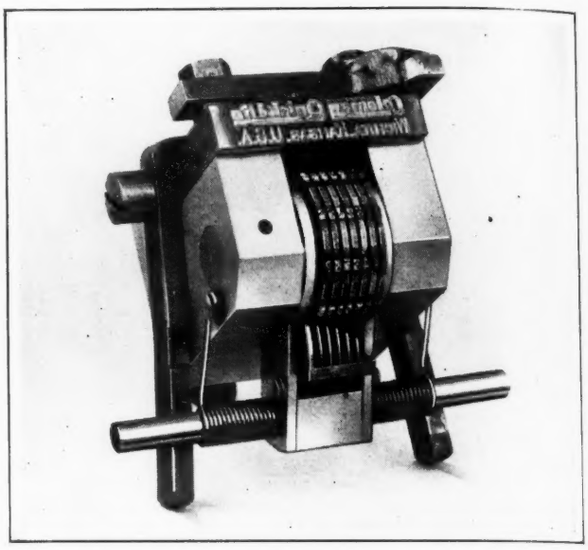

Noble & Westbrook Device for marking and numbering Cylindrical Parts

Co., 19 Asylum St., Hartford, Conn. The device is intended for use in connection with a marking machine built by the same company. The operation is simple, the parts rotating on a suitable holding fixture on the table of the marking machine, and being carried, marked and numbered by the device.

For ordinary changing of the numbers in numbering parts serially, a hand-lever on the device is depressed to automatically give the next higher number. On the particular device illustrated, however, a lever has been supplied that operates by striking a fixed point of the holding fixture of the marking machine. After the marking operation is completed this lever advances the numbering mechanism to the next higher number. The device is particularly adapted to marking and numbering lamp stands, gun barrels and similar parts.

VAN DORN "HAFFINCH" PORTABLE DRILL

A new portable electric drill known as the "Haffinch" is being introduced on the market by the Van Dorn Electric Tool Co., Cleveland, Ohio. The drill will operate on either alternating or direct current and weighs about 16 pounds.

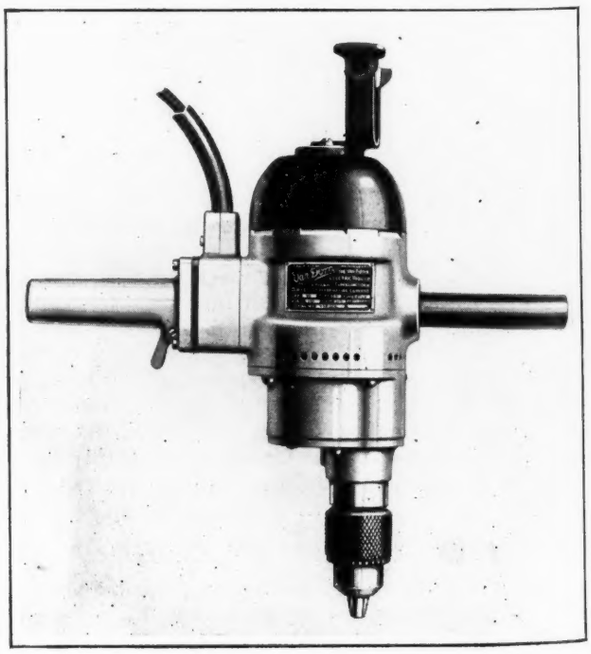

Van Dorn "Haffinch" Portable Electric Drill

It is equipped with a semi-automatic quick make- and break-switch. The motor armature pinion is made of heat-treated steel and is removable. Felt washers on the armature shaft retain the lubricant, and are prevented from getting into the bearing by steel washers. Ball bearings are furnished throughout. A feature of the motor is the simple design of the brush holder, the brush being readily accessible. The spade handle and the top head can be quickly removed to examine the brushes, and to lubricate the top bearing.

AUTOMATIC PLASTIC MOLDING MACHINE

For molding from plastic materials an almost unlimited variety of articles such as radio, telegraph and telephone parts, the Automatic Molding Press Co., 280 Passaic St., Newark, N. J., has recently developed the "Duo-Press" shown in the accompanying illustration. It is intended that this machine be equipped with two sets of molds so that one set may be loaded and unloaded while the work in the second set is being pressed and cured. The machine embodies a main press that has a maximum capacity of 127 tons; a sub-press for pre-forming and pre-heating the parts; a mold gripping and separating mechanism which has a pulling capacity of 94 tons; and a tilting-head mechanism which exposes the molds and thus makes them readily accessible for unloading, cleaning and reloading. Another interesting feature is the incorporation of four chambered jackets which simultaneously heat and cool two batches of articles in any combination or manner best suited to the requirements of the compound used and the articles made. The continuous heating and cooling system is said to insure uniformity.

There is a method of suspending the mold chase on the turntable while the lower plate is being removed for substituting ejector-pins, without removing the molds. The turntable is operated automatically on ball bearings to transpose the two molding units. The machine is adapted to the use of both simple and complicated forms of positive or negative molds. In an operation, air and gas are permitted to escape between pressings. The machine is built in a number of sizes.

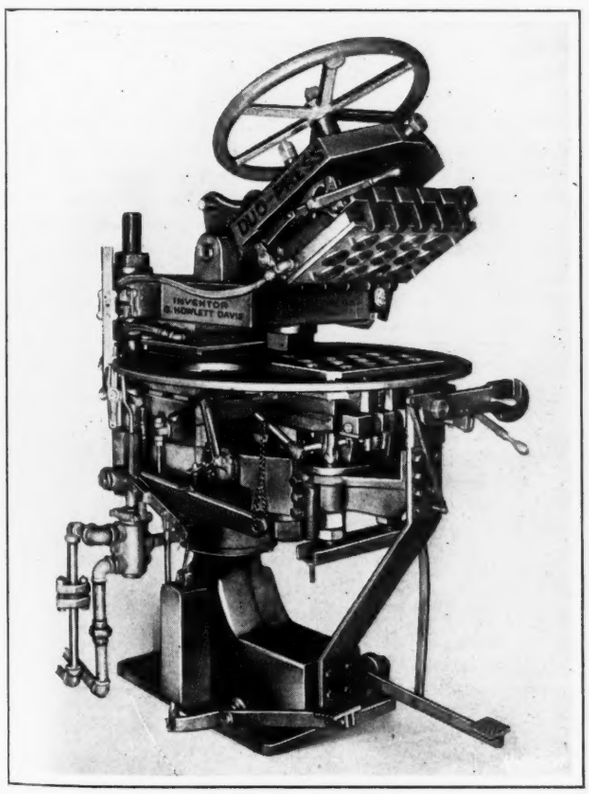

"Duo-Press" Universal Plastic Molding Machine

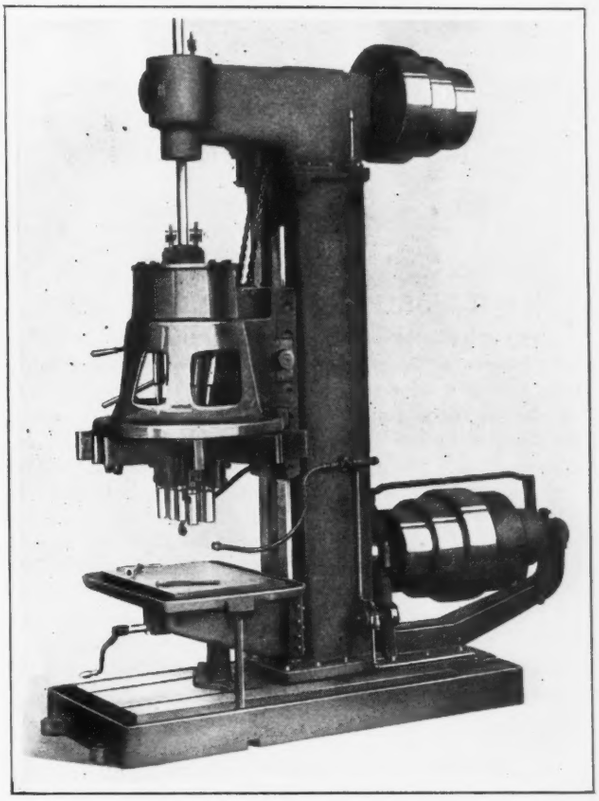

Fox High-speed Multiple Drilling Machine

FOX MULTIPLE DRILLING MACHINE

A high-speed multiple drilling machine that has recently been built by the Fox Machine Co., Jackson, Mich., is equipped with a transmission case on top of the column and a cone pulley drive that are similar in design to the case and drive provided on the No. 12-A machine described in July, 1923, MACHINERY. The drill head, column and base follow the design of the respective parts of a machine described in April, 1924, MACHINERY. This new No. 22-A machine is regularly furnished with a table of the adjustable knee type, but it may be equipped with a box or rotary table.

There is an Edgemont single-disk clutch mounted inside of the main driving pulley. This pulley and the lower cone-pulley shaft run on roller bearings, while the shaft of the upper cone pulley is equipped with three self-aligning ball bearings. Ball bearings are also furnished in other places. On the upper cone-pulley shaft there are three gears for changing the feed, a three-step cone gear on an auxiliary shaft being brought into mesh by means of a lever on the transmission case. Worm-gearing transmits the power to the vertical shaft connected to the drill head. The feed clutch of the drill head is of the Fox saw-tooth type and is equipped with an automatic knock-out.

The transmission case is partially filled with oil so as to lubricate various parts by the splash method. There is a forced feed pump on the column which carries oil to the transmission case from which it runs down the vertical shaft to the drill head, this shaft being enclosed in telescoping sleeves. The oil runs through the bearing of the pinions in the drill head and collects in a lower chamber from which it is returned to the storage tank, a patented construction preventing the oil from running from the head down on the spindles. Spindles may be furnished with single or variable speeds. Thus, the spindles may be run at different speeds to suit drills of different diameter and any spindle may be stopped when not in use. The universal joints consist of but three parts, two solid forks and a solid square center block. Patented cluster plates are recommended when the machine is to be used on production work. The weight of this machine is approximately 5150 pounds.

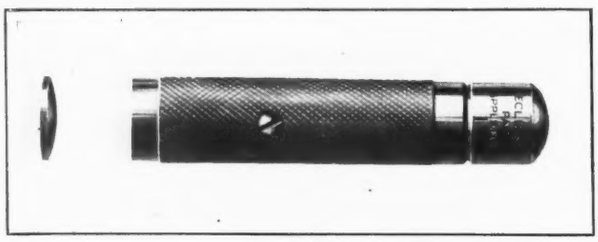

Eclipse Setting Tool for Welch Plugs

ECLIPSE PLUG SETTING TOOLS

A line of tools is now being manufactured by the Eclipse Interchangeable Counterbore Co., 7410 St. Aubin Ave., Detroit, Mich., in sizes ranging from ½ to 2¼ inches in diameter for use in setting Welch expansion core-hole plugs. It has been developed in cooperation with the manufacturer of these plugs. The most common method of using the plugs has been to insert them in a counterbored hole and then strike them with a hammer. In this method a careless workman may miss the plug and produce a cracked cylinder wall, or else hit the plug too hard and cause a concave plug which results in a leaky joint. By using this Eclipse tool the hammer cannot come in contact with the cylinder wall nor the plug be concaved. No matter how hard the tool is struck the plug is dented the amount recommended by the manufacturer. The shell of the setting tool is made of machine steel, and the set of tool steel.

RADIANT PISTON-RING TESTER

Waves, gouges, twists and other defects in the faces or sides of piston-rings are tested by means of an electric light in a device recently brought out by the Radiant Gauge Company, 227-229 N. Holliday Street, Baltimore, Md. The piston-ring is placed between two gaging surfaces as shown at *A*, these surfaces being hardened, ground and lapped flat. There is a central opening through the gages in which an electric lamp is arranged to automatically elevate and depress in the center of the piston-ring. When the ring is in place and the upper gage lowered on it, defects in the ring are evident wherever light is visible. The handle near the base is operated to elevate and swing the upper gage which is pivotally supported. The entire gage may be revolved by hand by means of the spring wire ring shown. This particular model tests piston-rings from 2⅝ to 4⅞ inches in diameter and of any width, without requiring adjustments.

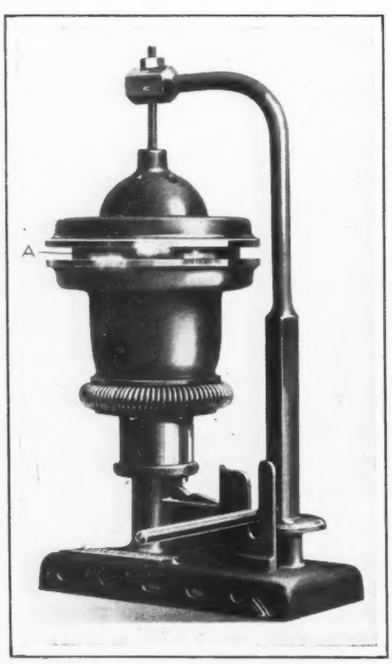

Device for testing Piston-rings by Light

DODGE ROLLER BEARING HANGER

A lineshaft bearing that incorporates the Timken tapered roller bearing and which has several new features of construction, has recently been placed on the market by the Dodge Manufacturing Corporation, Mishawaka, Ind. There are only five parts to the complete bearing. Two Timken bearings are mounted on a ground and slotted steel tube or sleeve and fitted to an accurately machined housing. The ends of the tube are threaded to suit clamping collars which are designed to enable an accurate adjustment of the roller bearings on the tube. This adjustment is made at the factory and need not be altered by the user.

The bearing may be used on any commercial shafting as the steel tube is fastened to the shaft by simply tightening screws in each of the clamping collars. Attention is particularly called to the dust-proof construction of the bearing. The tube extends from end to end of the housing, and liberal grease compartments are provided inside of the housing and outside of the tube. The outer ends of the bearings are protected against dust by metallic grease seals which take the place of felt washers or packing and also eliminate friction at these points. The erection of this lineshaft bearing consists simply of slipping the bearing over the shaft and tightening the screws in the clamping collars. The method of mounting the tapered roller bearings is said to insure the full use of the bearings for both radial and thrust loads.

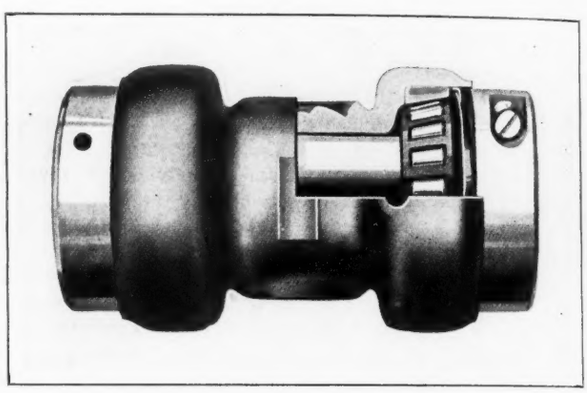

Dodge Bearing equipped with Timken Tapered Roller Bearings

PAPER PULLEYS

A new line of paper pulleys is being introduced to the trade by the Best Pulley Manufacturing Co., 400 Talcott Ave., St. Louis, Mo. It is claimed that these pulleys reduce belt slippage, require less belt tension and result in better power transmission. They are made of selected, special-treated paper fiber which is hydraulically compressed into a solid block. The end grain of the fiber is exposed to the belt. A feature of the pulleys is a patented double locking hub which has three sets of two ribs each that grip into the paper and prevent the hub from coming loose, even though the direction of pulley rotation is reversed. These pulleys are made in 2500 stock sizes.

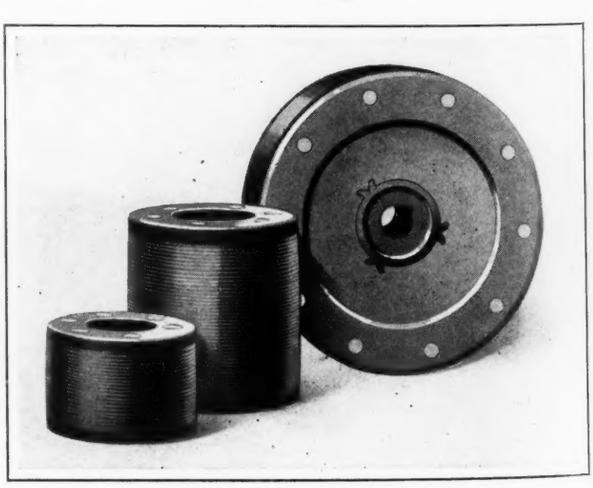

Paper Pulleys made by the Best Pulley Mfg. Co.

"GUSHER" MOTOR-DRIVEN PUMPS

Three motor-driven pumps which deliver from 15 to 80 gallons of lubricant per minute, respectively, when running at 1725 revolutions per minute, are being placed on the market by the Ruthman Machinery Co., Cincinnati, Ohio. With the exception of the motor drive and the regulating valve, the pumps are similar to that illustrated in August MACHINERY. The motor connection consists simply of two flanges equipped with pins and a leather connecting piece. The principal advantage of the motor-driven models is the ease with which they may be applied to machines, thus enabling their use either as a permanent or a temporary installation on a machine. The delivery of lubricant can be regulated from nothing to maximum. It is mentioned

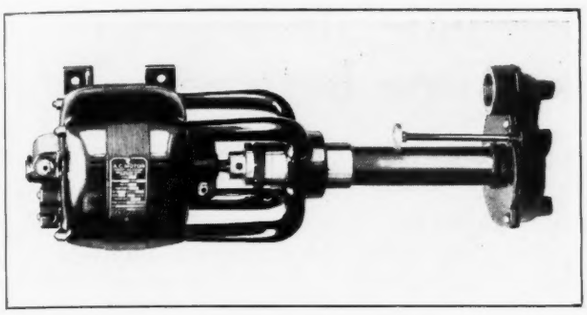

"Gusher" Motor-driven Lubricant Pump

that the pumps can be disassembled in from 1 to 3 minutes so that they can be cleaned with little delay to the operation of the machines to which they are applied.

WELLS FIRE-HOSE COUPLING TOOLS

A complete set of tools is now manufactured by the Wells Corporation, Greenfield, Mass., for producing fire-hose coupling threads according to the standards which have been adopted by the American Society of Mechanical Engineers and approved by the National Screw Thread Commission. This National standard specifies 7½ threads per inch on a 2½-inch hose. The set illustrated is a maintenance set intended for use in fire departments for re-threading, straightening and smoothing up the threads of both male and female fittings that have become damaged in use.

Included in this set is a tool used to expand internal parts that have been crushed or bent out of shape. In addition, there is a tool for expanding male fittings until the outside diameter is somewhat larger than the standard size. Then by running the dies over the thread some of the excess metal is cut from the front, back and top of the thread to make it standard. The same operation may be performed on couplings except when it is impossible to draw them together. The set includes plug and ring gages for checking the size of fittings on new hose.

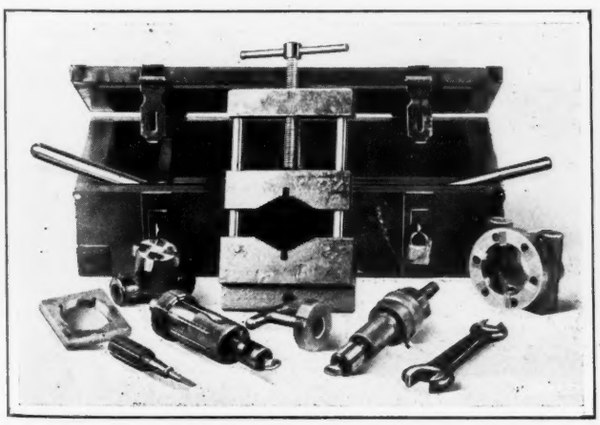

Wells Tools for maintaining Standardized Fire-hose Coupling Threads

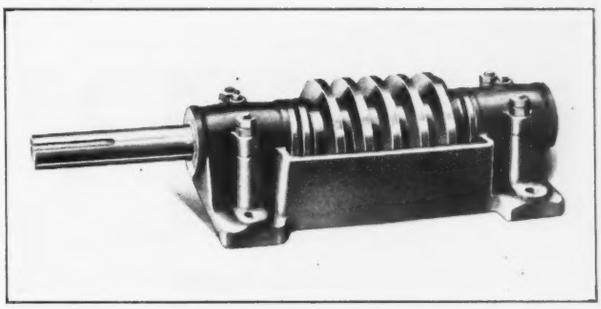

Jones Double-thrust Worm Box

JONES DOUBLE-THRUST WORM BOX

A double-thrust worm box intended for use with open worm-gear drives when it is preferable not to use a completely enclosed unit, is now being made by the W. A. Jones Foundry & Machine Co., 4409 W. Roosevelt Road, Chicago, Ill. This box provides an accurate and rigid support for the worm-shaft and holds a liberal oil supply in which the worm operates. There are three thrust washers at both ends of the worm, two of these being made of steel and the center one of hard fiber. The bearings are babbitted, bored and faced. The box is made in standard sizes to suit the standard cut steel worms made by the same concern.

HISEY BENCH DRILL STAND

A bench stand equipped with a lever feed is now manufactured by the Hisey-Wolf Machine Co., Cincinnati, Ohio, for all portable Hisey drilling machines up to and including the ⅝-inch size. The illustration shows the stand supplied with the adapter required with the ¼- and 5/16-inch drills. The stand is fitted with an adjustable depth drilling stop which is convenient in producing duplicate work. The design of the stand is such that the drill can be attached without removing a single part. The equipment consists of a portable sensitive drill press that can be operated from any lamp socket.

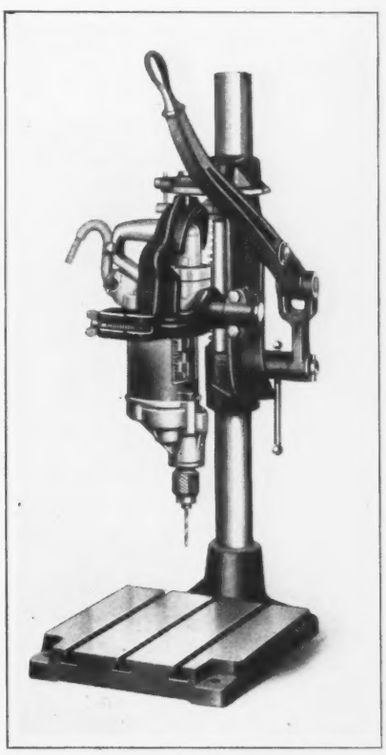

Hisey Bench Drill Stand

A few of the specifications are as follows: Length of feed by means of the lever, 4½ inches; maximum distance from top of base to drill chuck, 17 inches; distance from center of drill spindle to column, 6½ inches; size of base, 12 by 11 inches; diameter of column, 2 inches; net weight of stand, 90 pounds.

CONRADSON REAMERS

Reamers constructed of a body made from an alloy having the physical properties of machine steel and of cutting blades of high-speed steel cast into the body, are now being introduced to the trade by the Conradson Tool Corp., 2539

BROWN & S

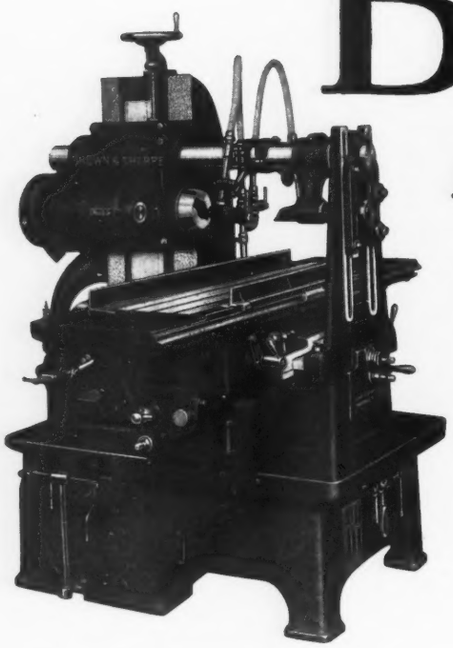

Brown & Sharpe Automatic Milling Machines are built in two sizes—the No. 21 for lighter jobs and the No. 33 for your heavy work.

AUTOMATIC MILLING MACHINES Save Time between Cuts

The instant a cut is finished the table of a Brown & Sharpe Automatic Milling Machine reverses and under rapid traverse moves the other work holding fixtures under the cutters. The feed is then automatically thrown in and another cut started. These automatic table movements keep the cutting tools working almost continuously.

The table with its rapid traverse moves at a fast rate between cuts, reducing non-cutting time to a minimum.

It is this big reduction of non-cutting time which helps make Brown & Sharpe Automatic Milling Machines such fast producers.

They are economical to use on either continuous quantity or smaller job lot work. Full details about them will gladly be sent on request.

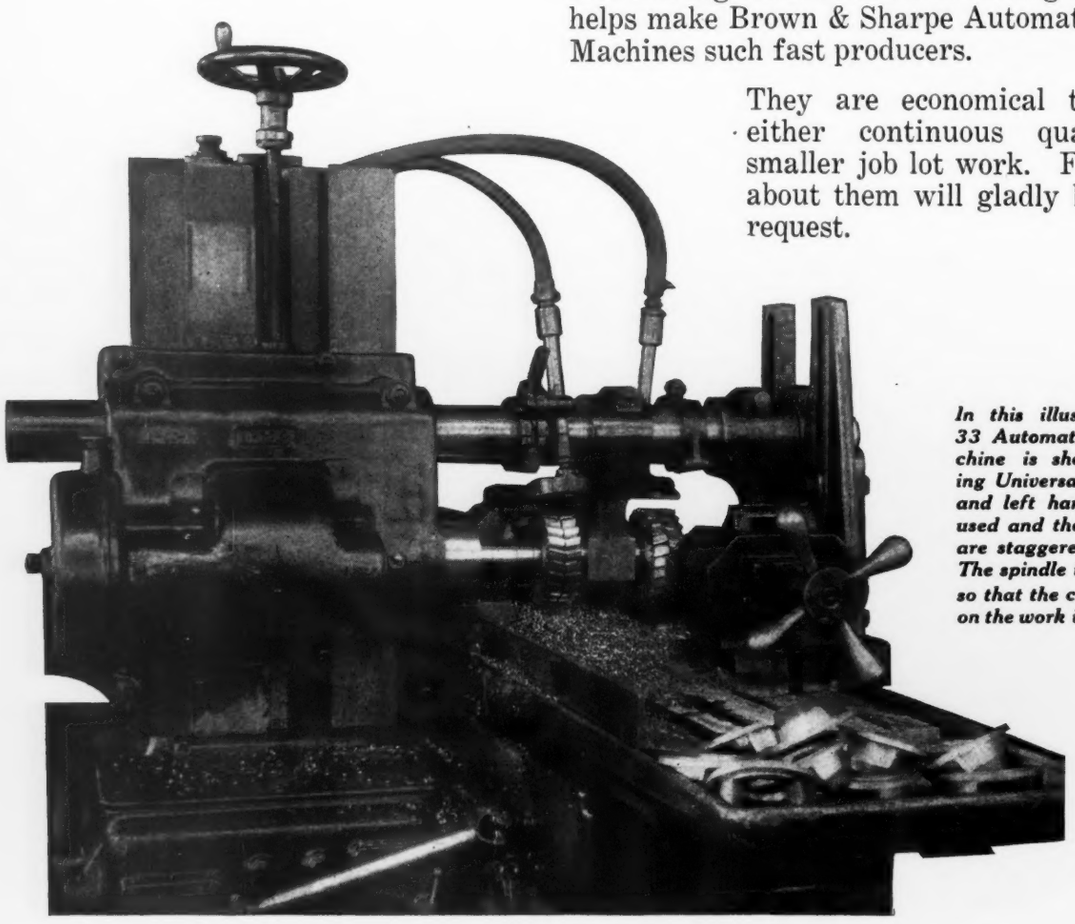

In this illustration a No. 33 Automatic Milling Machine is shown slot milling Universal Joints. Right and left hand cutters are used and the work fixtures are staggered on the table. The spindle is set to reverse so that the cutters cut down on the work in both fixtures.

SHARPE

CUTTERS

Stand up under high speeds and heavy service

There is a lot of satisfaction in using Brown & Sharpe Milling Cutters on high production work. Regardless of whether the work is light or heavy these cutters give a high degree of accuracy and an economical performance.

Their big economy lies in the fact that they stand up under the strain of high speeds and heavy service.

Brown & Sharpe Cutters save time by making cuts quickly. They cut freely and give big production between resharpenings.

Three things are responsible for their fine performance—our experience as cutter makers—the materials used in making cutters—and the careful way in which they are heat-treated. Together they give to each Brown & Sharpe cutter a proper balance of power and strength and a toughness which keeps the cutting edges sharp under severe conditions.

BROWN & SHARPE MFG. CO.

Providence, R. I., U. S. A.

B·S TRADE MARK

A Complete Milling Equipment Service

Brown & Sharpe line of Cutters includes over 45 styles and 3000 sizes of Milling Cutters, Gear Cutters and Hobs, regularly carried in stock.

- Milling Cutters
- Side Milling Cutters
- Face Milling Cutters with Inserted Teeth
- End Mills
- Woodruff Key Seat Cutters
- Standard T Slot Cutters
- Angular Cutters
- Convex and Concave Cutters
- Corner Rounding Cutters
- Metal Slitting Saws
- Screw Slotting Cutters
- Sprocket Wheel Cutters for Roller Chains
- Gear Cutters
- Stocking Cutters for Involute Gears
- Gear Hobs

Make use of our manufacturing facilities and engineering experience to solve your milling problems—we make Special Cutters and Hobs of every description.

Get all the details about Brown & Sharpe Cutters—write for a copy of Small Tool Catalog No. 29—it's new.

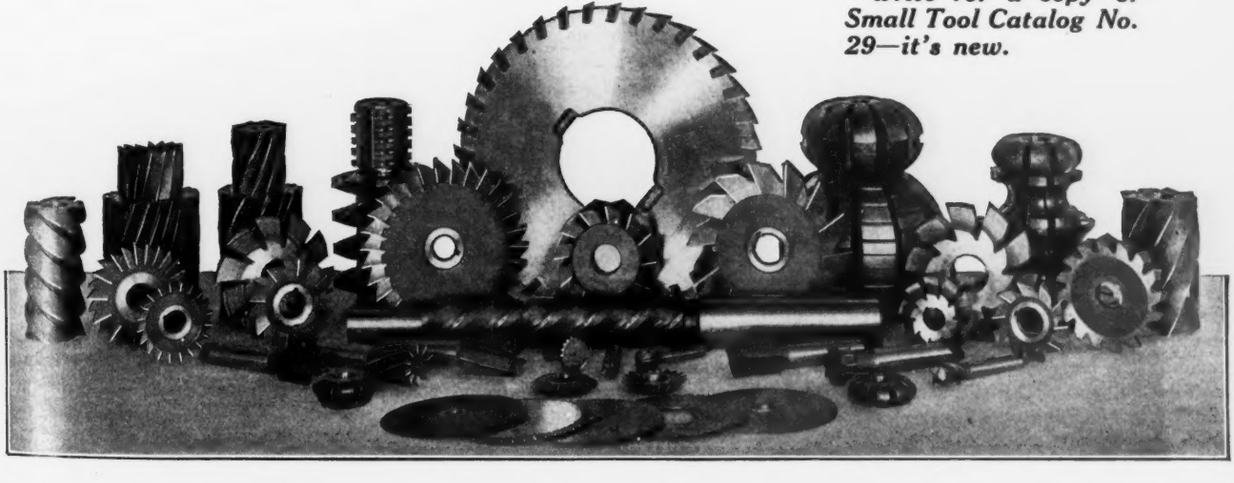

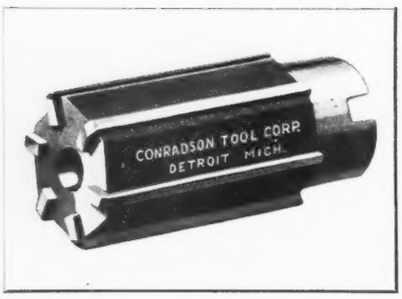

Conradson Reamer with Blades cast in the Body

Woodward Avenue, Detroit, Michigan. The blades can be cast into place because the melting point of the body metal is far below the drawing point of the high-speed steel blades. The blades extend 3/32 inch below the end of the reamer body to permit facing clean the bottom of a hole. The hole through the reamers is made standard so that standard arbors may be used with the tools. The reamers are at present made in 1 3/16 to 1 1/4 inch sizes but will shortly be marketed in a range of sizes from 1 to 5 inches.

OXWELD VALVE FOR OXYGEN MANIFOLDS

A valve which has recently been developed by the Oxweld Acetylene Co., 30 E. 42nd St., New York City, for oxygen manifolds which must withstand high pressures, is claimed to be fool-proof. As the illustration shows, this valve has a swivel tip *A* on the stem which registers in a seat provided in the body. The tip is attached to the stem *B* by means of a swivel joint, a construction that permits the tip to seek its own natural seat in the body. The stem-screw *C* is in the inner end of the stuffing-box, the latter being made gas-tight in the body by means of the lead gasket *D*. The stem itself is made gas-tight by the rubber packing *E* which is compressed between packing rings *F* by means of the handwheel and nut.

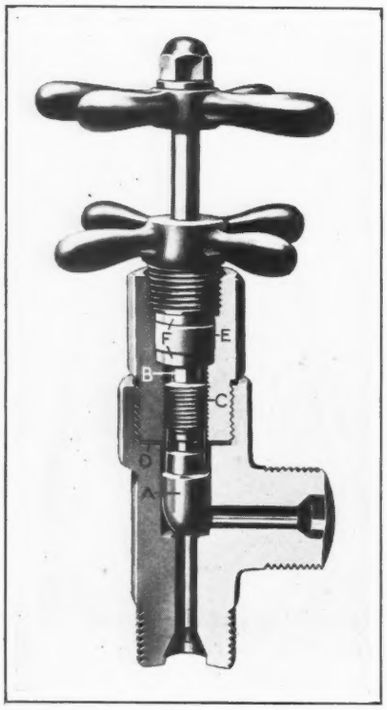

Oxweld Valve for High-pressure Oxygen Manifolds

If the operator should happen to unscrew the handwheel all the way, there is no possibility of the internal parts being blown out by pressure, because the stem screws into the stuffing-box. Even if he should unscrew both the stem and the handwheel, the parts could not come out because the large end of the stem would lodge against the inner end of the stuffing-box.

ROSS SNAGGING-WHEEL DRESSER

A dresser for the wheels of grinding stands, which is mounted firmly on the machine for the operation, is now made by the Ross Mfg. Co., Cleveland, Ohio. With such an installation, practically the same dressing methods may be applied to snagging and similar wheels as those generally used on precision grinding machines. The new device consists of three major parts, a regular Ross-type dresser, a bracket into which the dresser shank fits, and a base on which the bracket is slid to pass the dresser across the face of the wheel. A post at the bottom of the device fits into the tool-rest holder on the grinding stand. Various sizes and types of posts are furnished to suit different stands.

In dressing a wheel, the cutting disks are brought into contact with the wheel by means of a feed-screw which engages a thread on the shank of the dressing tool proper. The contact position is held by a set-screw at the top of the dresser which bears against a flat surface of the shank. The loaded surface of the wheel is removed as the operator slides the tool back and forth on its base by alternately pushing and pulling the lubricated cross-bar. Between the passes, the operator gradually advances the feed-screw until

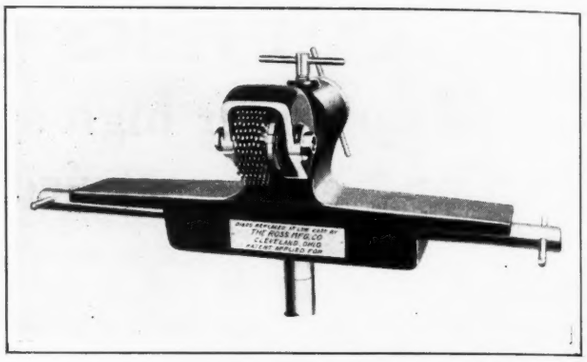

Ross Snagging-wheel Dresser

the desired amount of stock has been taken from the wheel. The rigid mounting of the tool and the absence of play are said to insure the removal of high spots from a wheel that is out of round and restore it to the original cylindrical form. Grooves are also readily dressed out and the cutting face of the wheel automatically made square with the sides.

The cutting disks, which are replaceable when worn, slip over a barrel that revolves on a hardened and ground spindle equipped with ball bearings. Special slotted washers inlaid with felt keep abrasive particles from the spindle bearings, while the sliding surfaces of the bracket and base are similarly protected by an overlapping apron.

* * *

WORLD'S DRILLING RECORD

A new world's record in drilling cast iron and machine steel was established in a test made with "Cle-forge" high-speed drills manufactured by the Cleveland Twist Drill Co., Cleveland, Ohio, at the recent convention of the American Railway Association. Two tests were made on cast iron with No. 940 "Cle-forge" drills of 1- and 1¼-inch sizes, respectively. The 1-inch drill operating at 800 revolutions per minute, with a feed of 0.145 inch per revolution, and a peripheral speed of 210 feet per minute, drilled through 116 inches of cast iron per minute, and removed 91.1 cubic inches of metal, weighing 23.6 pounds. The 1¼-inch drill operating at the same number of revolutions per minute and feed, drilled through 116 inches of cast iron per minute and removed 142.2 cubic inches, weighing 37 pounds.

The same drills were used in the machine steel tests. In this case the 1-inch drill operating at 615 revolutions per minute, with a feed of 0.0815 inch per revolution, and a peripheral speed of 161 feet per minute, drilled through 50.1 inches of machine steel and removed 39.4 cubic inches of metal weighing 11.12 pounds. The 1¼-inch drill was operated at 550 revolutions per minute, with a feed of 0.0815 inch per revolution, and a peripheral speed of 180 feet per minute. In this case the tool drilled through 44.8 inches of metal per minute and removed 55 cubic inches, weighing 15.52 pounds.

The tests were made for the sole purpose of determining, under extreme conditions, what penetration could be secured with drills taken from commercial stock. The extreme penetration secured is higher than is recommended for normal shop conditions, but the figures indicate that standard drilling production can be increased with a corresponding decrease in costs and without decreasing the life of the drills.

Little Stories of Service and Savings

Much Closer Limits

Possible with Cincinnati Cone Driven Millers

S K F INDUSTRIES *says*—

In the Tool-room

A No. 2 Plain Cone Cincinnati Miller was selected as the right machine for this job. It is equipped with the Universal Indexing and Dividing Head and the operation is that of milling slots on indexing guides, used for making metal stampings for very accurately constructed ball bearings. *Accuracy* of the machine is of utmost importance.

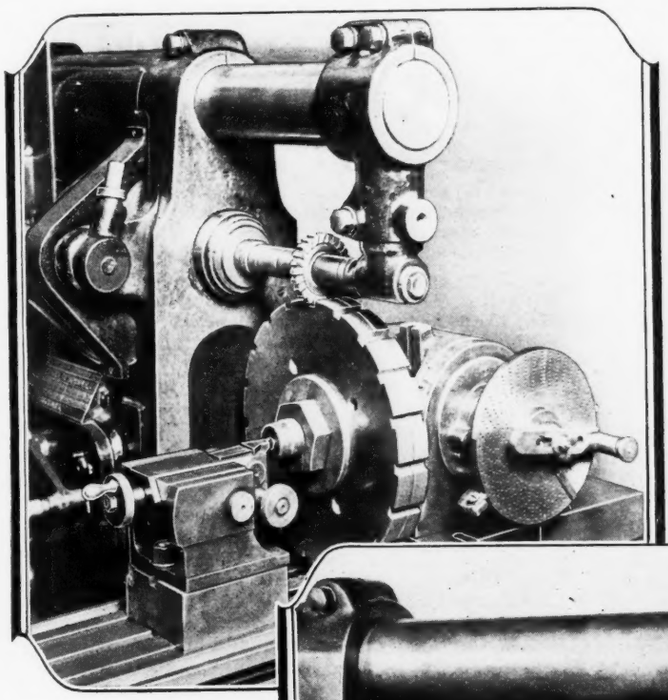

"Our battery of Cincinnati Millers, in use for a number of years, has been responsible for the manufacture of parts of much closer tolerances than generally adhered to in this class of work. The quality of product, efficiency of machines and cost of maintenance, have been within extremely satisfactory limits."

In all we manufacture 38 types and sizes of Milling Machines. To make certain that you obtain the *right* size and style of machine for your particular job, we maintain an Engineering Service Department. Whether you have tool-room or production work, there is a "CINCINNATI" Miller built for the job.

Send your jobs to us in the form of blueprints and sample parts. We will prepare a complete estimate, including time studies and layouts for suggested fixtures and tools.

The Cincinnati Milling Machine Co.
CINCINNATI, OHIO

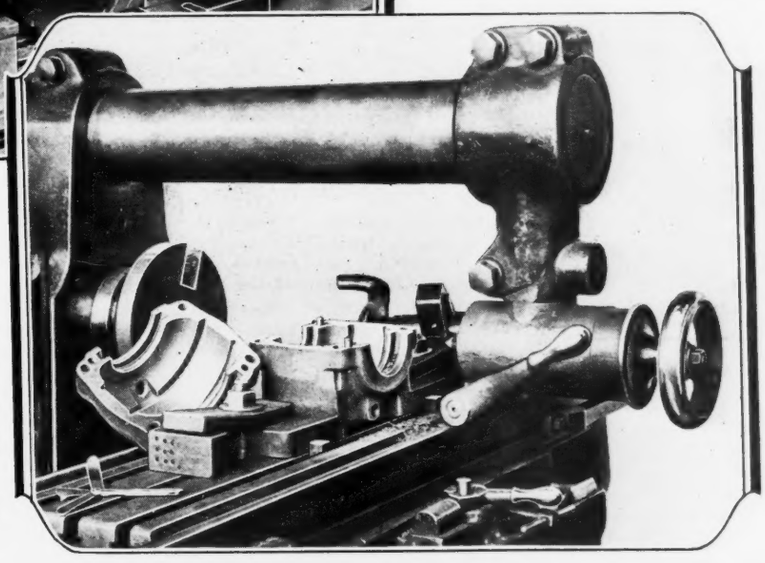

On Production Work

A No. 2 Plain Cone "Cincinnati" Miller boring inside of ball bearing housings. Tolerance allowed from .0012" to .002" on the diameter for sizes ranging from 2" to 7". An example of where production demands *accuracy* as well as *speed* in output.

CINCINNATI MILLERS

Conradson Reamer with Blades cast in the Body

Woodward Avenue, Detroit, Michigan. The blades can be cast into place because the melting point of the body metal is far below the drawing point of the high-speed steel blades. The blades extend 3/32 inch below the end of the reamer body to permit facing clean the bottom of a hole. The hole through the reamers is made standard so that standard arbors may be used with the tools. The reamers are at present made in 1 3/16 to 1 1/4 inch sizes but will shortly be marketed in a range of sizes from 1 to 5 inches.

OXWELD VALVE FOR OXYGEN MANIFOLDS

A valve which has recently been developed by the Oxweld Acetylene Co., 30 E. 42nd St., New York City, for oxygen manifolds which must withstand high pressures, is claimed to be fool-proof. As the illustration shows, this valve has a swivel tip *A* on the stem which registers in a seat provided in the body. The tip is attached to the stem *B* by means of a swivel joint, a construction that permits the tip to seek its own natural seat in the body. The stem-screw *C* is in the inner end of the stuffing-box, the latter being made gas-tight in the body by means of the lead gasket *D*. The stem itself is made gas-tight by the rubber packing *E* which is compressed between packing rings *F* by means of the handwheel and nut.

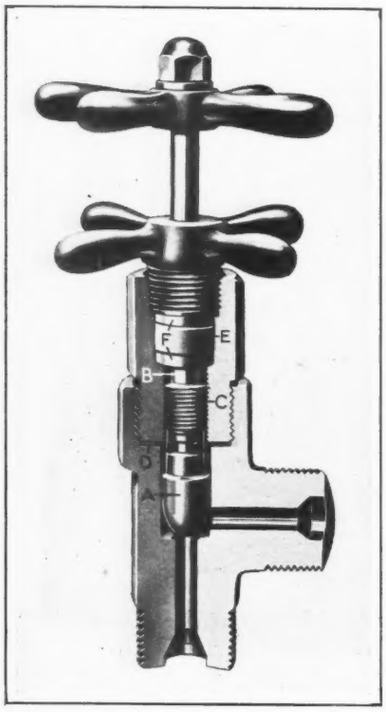

Oxweld Valve for High-pressure Oxygen Manifolds

If the operator should happen to unscrew the handwheel all the way, there is no possibility of the internal parts being blown out by pressure, because the stem screws into the stuffing-box. Even if he should unscrew both the stem and the handwheel, the parts could not come out because the large end of the stem would lodge against the inner end of the stuffing-box.

ROSS SNAGGING-WHEEL DRESSER

A dresser for the wheels of grinding stands, which is mounted firmly on the machine for the operation, is now made by the Ross Mfg. Co., Cleveland, Ohio. With such an installation, practically the same dressing methods may be applied to snagging and similar wheels as those generally used on precision grinding machines. The new device consists of three major parts, a regular Ross-type dresser, a bracket into which the dresser shank fits, and a base on which the bracket is slid to pass the dresser across the face of the wheel. A post at the bottom of the device fits into the tool-rest holder on the grinding stand. Various sizes and types of posts are furnished to suit different stands.

In dressing a wheel, the cutting disks are brought into contact with the wheel by means of a feed-screw which engages a thread on the shank of the dressing tool proper. The contact position is held by a set-screw at the top of the dresser which bears against a flat surface of the shank. The loaded surface of the wheel is removed as the operator slides the tool back and forth on its base by alternately pushing and pulling the lubricated cross-bar. Between the passes, the operator gradually advances the feed-screw until

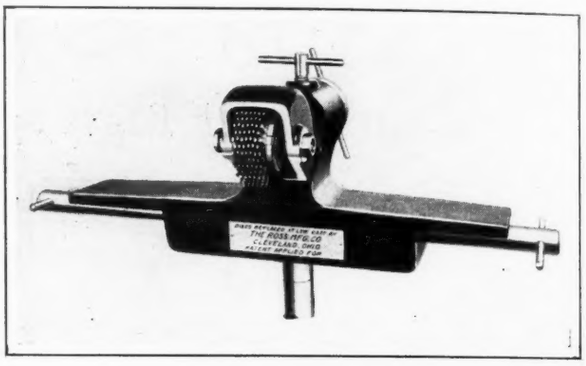

Ross Snagging-wheel Dresser

the desired amount of stock has been taken from the wheel. The rigid mounting of the tool and the absence of play are said to insure the removal of high spots from a wheel that is out of round and restore it to the original cylindrical form. Grooves are also readily dressed out and the cutting face of the wheel automatically made square with the sides.

The cutting disks, which are replaceable when worn, slip over a barrel that revolves on a hardened and ground spindle equipped with ball bearings. Special slotted washers inlaid with felt keep abrasive particles from the spindle bearings, while the sliding surfaces of the bracket and base are similarly protected by an overlapping apron.

* * *

WORLD'S DRILLING RECORD

A new world's record in drilling cast iron and machine steel was established in a test made with "Cle-forge" high-speed drills manufactured by the Cleveland Twist Drill Co., Cleveland, Ohio, at the recent convention of the American Railway Association. Two tests were made on cast iron with No. 940 "Cle-forge" drills of 1- and 1¼-inch sizes, respectively. The 1-inch drill operating at 800 revolutions per minute, with a feed of 0.145 inch per revolution, and a peripheral speed of 210 feet per minute, drilled through 116 inches of cast iron per minute, and removed 91.1 cubic inches of metal, weighing 23.6 pounds. The 1¼-inch drill operating at the same number of revolutions per minute and feed, drilled through 116 inches of cast iron per minute and removed 142.2 cubic inches, weighing 37 pounds.

The same drills were used in the machine steel tests. In this case the 1-inch drill operating at 615 revolutions per minute, with a feed of 0.0815 inch per revolution, and a peripheral speed of 161 feet per minute, drilled through 50.1 inches of machine steel and removed 39.4 cubic inches of metal weighing 11.12 pounds. The 1¼-inch drill was operated at 550 revolutions per minute, with a feed of 0.0815 inch per revolution, and a peripheral speed of 180 feet per minute. In this case the tool drilled through 44.8 inches of metal per minute and removed 55 cubic inches, weighing 15.52 pounds.

The tests were made for the sole purpose of determining, under extreme conditions, what penetration could be secured with drills taken from commercial stock. The extreme penetration secured is higher than is recommended for normal shop conditions, but the figures indicate that standard drilling production can be increased with a corresponding decrease in costs and without decreasing the life of the drills.

Little Stories of Service and Savings

Much Closer Limits

Possible with Cincinnati Cone Driven Millers

S K F INDUSTRIES *says*—

In the Tool-room

A No. 2 Plain Cone Cincinnati Miller was selected as the right machine for this job. It is equipped with the Universal Indexing and Dividing Head and the operation is that of milling slots on indexing guides, used for making metal stampings for very accurately constructed ball bearings. *Accuracy* of the machine is of utmost importance.

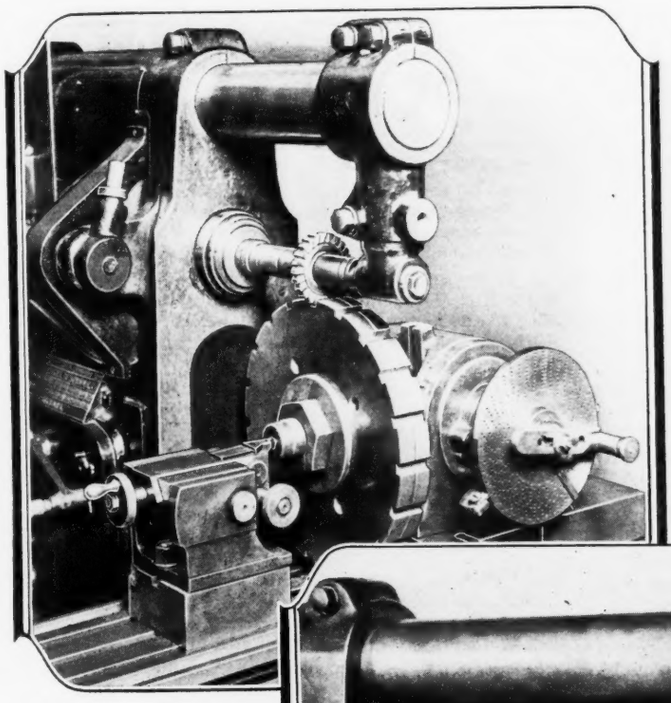

"Our battery of Cincinnati Millers, in use for a number of years, has been responsible for the manufacture of parts of much closer tolerances than generally adhered to in this class of work. The quality of product, efficiency of machines and cost of maintenance, have been within extremely satisfactory limits."

In all we manufacture 38 types and sizes of Milling Machines. To make certain that you obtain the *right* size and style of machine for your particular job, we maintain an Engineering Service Department. Whether you have tool-room or production work, there is a "CINCINNATI" Miller built for the job.

Send your jobs to us in the form of blueprints and sample parts. We will prepare a complete estimate, including time studies and layouts for suggested fixtures and tools.

The Cincinnati Milling Machine Co.
CINCINNATI, OHIO

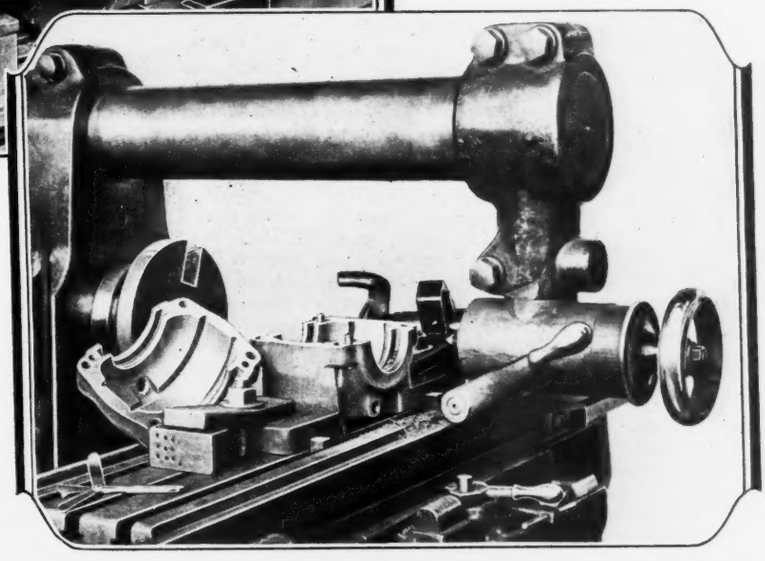

On Production Work

A No. 2 Plain Cone "Cincinnati" Miller boring inside of ball bearing housings. Tolerance allowed from .0012" to .002" on the diameter for sizes ranging from 2" to 7". An example of where production demands *accuracy* as well as *speed* in output.

CINCINNATI MILLERS

OBITUARIES

EDWIN C. HENN

Shortly after six o'clock Wednesday morning, August 20, an automobile in which were riding Edwin C. Henn, a director, and until recently, general superintendent and vice-president of the National Acme Co., Cleveland, Ohio, and O. A. Smith, superintendent of the screw products division of the National Acme Co., was hit by an express train on the Nickel Plate Railroad, one and one-half miles east of Painesville, Ohio, resulting in the death of both men. They were on their way to Warren, Pa., on a business trip.

Edwin C. Henn

Edwin C. Henn was born in New Britain, Conn., June 5, 1863, and attended public school until he was fourteen years old. After leaving school he was employed by the Russell & Irwin Co. as a brass finisher. At the age of eighteen he went to Ohio, where he was employed in a number of shops, until in 1883 he came back to Connecticut and entered the employ of the Pratt & Cady Co., Hartford, Conn., manufacturers of valves and fittings. At the age of twenty-one he became a contractor in this shop on brass valve production. With two associates, Messrs. Loveland and Hakewessell, he later organized the Standard Mfg. Co., obtaining from Christopher M. Spencer a contract for building twenty-five of his new screw machines. Later, Mr. Henn and Mr. Hakewessell set out to design an automatic machine that would be as accurate as any then existing, but that would have much greater speed. Unfortunately certain features of the machine developed were found to infringe upon patents of Allen Johnston of Ottumbwa, Iowa, which prevented the inventors from marketing their machine and caused the Standard Mfg. Co. shortly afterward to fail.

Oscar A. Smith

Mr. Henn then went to work with the Pratt & Whitney Co., Hartford, Conn., as a demonstrator, and meanwhile he worked evenings experimenting with another multiple-spindle automatic, the "Acme," in which he interested his brother, A. W. Henn, then living in Cleveland. The Acme Machine Screw Co. was organized and at first located in Hartford. In 1898 a new company was started in Cleveland known as the National Mfg. Co. for the purpose of manufacturing standard screws. In 1901 a combination of the Acme Machine Screw Co. and the National Mfg. Co. was effected under the name of the National Acme Mfg. Co., of which E. C. Henn became general superintendent, the location of the new company being in Cleveland. E. C. Henn remained general superintendent and vice-president of the National Acme Co. from its beginning until the spring of 1924, when he was succeeded by his son, Oliver L. Henn. At the time of his death he was also a director of the company. Mr. Henn is survived by his wife, six sons and two daughters.

OSCAR A. SMITH

O. A. Smith, superintendent of the screw products division of the National Acme Co., Cleveland, Ohio, who died in the automobile accident mentioned above, was born September 9, 1872, at New Britain, Conn., and learned the machinist's trade with the John Pratt Co., Hartford, Conn. About 1896 he became associated with E. C. Henn, who at that time was experimenting with his multiple-spindle automatic screw machine, and he was directly associated with Mr. Henn throughout the rest of his life. Mr. Smith, in conjunction with Mr. Henn, was responsible for many of the inventions brought out by the National Acme Co. In addition to his experimental work, Mr. Smith was also connected with the National Acme Co. in numerous executive capacities.

CHAUNCY B. HERSHEY, manager of the Fitchburg Grinding Machine Co., Fitchburg, Mass., died August 6 at his home in Whalom, Mass., aged 54 years. Mr. Hershey had a long experience in the grinding machine business, having obtained his earlier training with the Landis Tool Co. He came to Fitchburg in 1911, and has been manager of the Fitchburg Grinding Machine Co. since 1916. He is survived by a widow and two sons.

GEORGE C. BARDONS, of Bardons & Oliver, Cleveland, Ohio, manufacturers of turret lathes, died July 29 from pneumonia, after a short illness, at the age of sixty-three years. Mr. Bardons was born in New York and located in Cleveland 39 years ago, when he first became connected with the engineering department of the Warner & Swasey Co. Later, he and John G. Oliver formed the firm of Bardons & Oliver.

GEORGE W. HAMPSHIRE, for the last six years manager of the Detroit office of the Colonial Steel Co., Pittsburg, Pa., died August 18, aged forty-seven years.

PERSONALS

R. H. ALKEMA and NEIL KING, formerly with the Vonnegut Machinery Co., Indianapolis, Ind., are now connected, as salesmen, with the Richey-Rhynearson Machinery Co., 23-25 E. South St., Indianapolis, Ind.

SAM TOUR, metallurgist of the Doehler Die-Casting Co., has changed his headquarters from the Brooklyn to the Batavia plant. Mr. Tour will carry on the same work that he has had charge of in the past at his new headquarters.

J. F. WHALEN, who for many years represented Manning, Maxwell & Moore in their Philadelphia office, has opened an office in the Bourse Bldg., Philadelphia, Pa., under the name of the Whalen Machinery Co., handling a general line of machinery and tools.

J. L. WILLIAMSON, who for the last eight years has been in charge of gear design and research work in the Railway Motor Department of the General Electric Co., Schenectady, N. Y., has become associated with the Fellows Gear Shaper Co., Springfield, Vt., as research engineer.

FRANK T. GOETZ has been appointed sales engineer and direct representative in the Cleveland territory for the Cincinnati Shaper Co., and its subsidiary, the Cincinnati Gear Cutting Machine Co. Mr. Goetz's offices are at 314 National Bldg., Cleveland, Ohio. K. H. CRUMRINE, formerly with the Gisholt Machine Co., and later works manager of the Millholland Machine Co., has also recently joined this organization in the capacity of sales engineer.

T. H. KING, sales manager of the Landis Tool Co., Waynesboro, Pa., for the last twelve years, has resigned to become treasurer and general manager of the Wayne Tool Mfg. Co., Waynesboro, manufacturer of small tools and automotive equipment. Mr. King has been actively connected with the Landis Tool Co. for the last eighteen years. He will be succeeded as sales manager by W. G. NEVIN, who has been connected with the company for twenty-two years.

ROSS WATSON, formerly district manager of the Cleveland branch office of the Chicago Pneumatic Tool Co., 6 East 44th St., New York City, has been transferred to the district managership of the Minneapolis branch to succeed D. M. WESBROOK, now general manager of the Canadian Pneumatic Co. Other recent changes include the transfer of L. J. WESTENHAVER from the Pittsburg office to Cleveland as district manager, and of E. C. STROUP, compressor engineer in the Boston territory, to the Pittsburg district.

A. L. JENKINS, professor of mechanical engineering at the University of Cincinnati, and well known as an author on mechanical subjects, will spend one year at Roberts College at Constantinople, Turkey, as exchange professor with L. A. Scipio, dean of the engineering department of Roberts College. Professor Jenkins has been with the University of Cincinnati for nineteen years and will return to the university after his one year in Constantinople. Readers of MACHINERY will recollect Professor Jenkins as the author of the series of articles on "Design of Punching and Shearing Machines," published in July, August, September, and October, 1923.

HOLES

Best Bored on the
"PRECISION"
Boring, Drilling
and Milling Machine

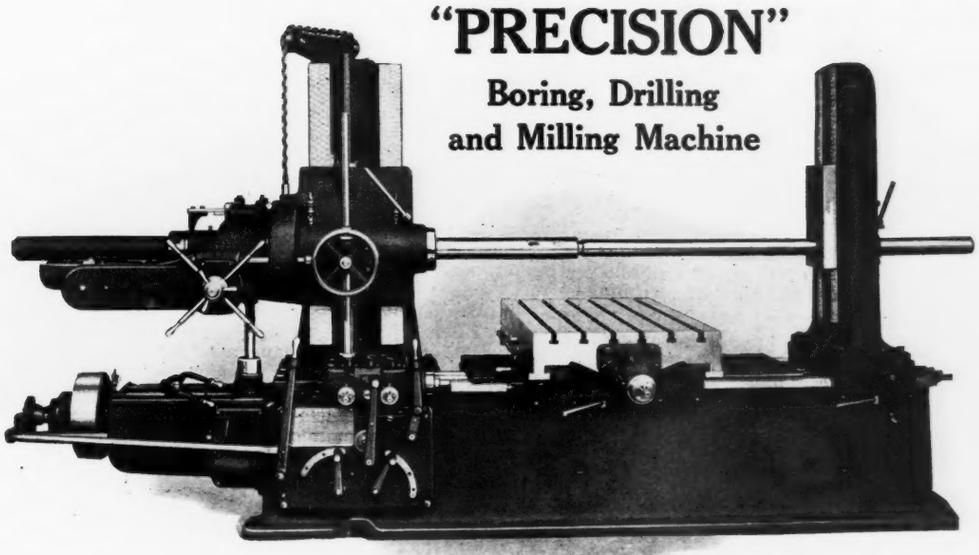

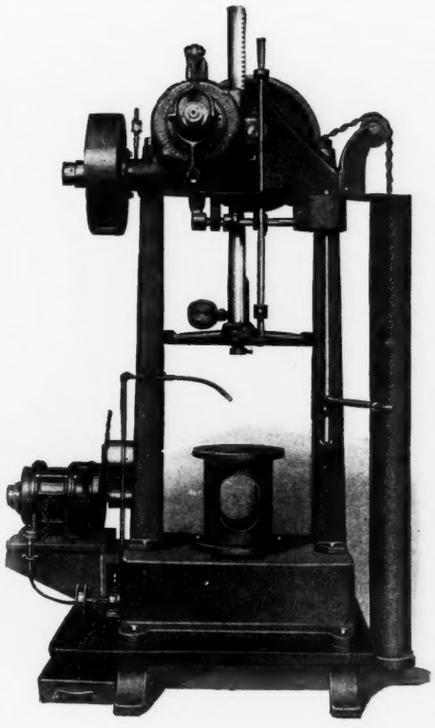

Best Bushed
on the
LUCAS
Power
Forcing
Press

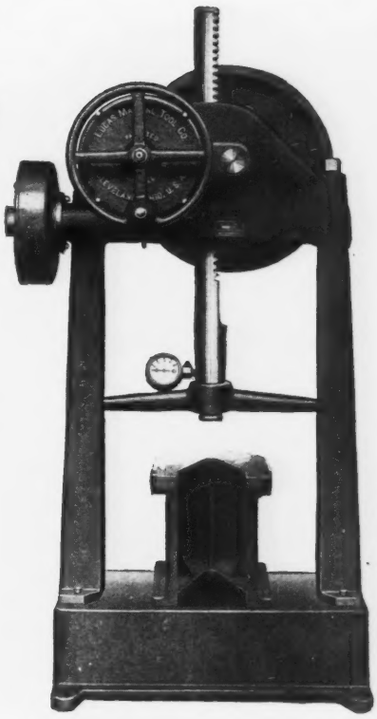

Best Broached
on the
LUCAS
Vertical
Broaching
Machine

LUCAS MACHINE TOOL CO. NOW AND ALWAYS OF CLEVELAND, OHIO, U.S.A.

FOREIGN AGENTS: Alfred Herbert, Ltd., Coventry. Societe Anonyme Belge, Alfred Herbert, Brussels. Allied Machinery Co., Turin, Barcelona, Zurich, V. Lowener, Copenhagen, Christiania, Stockholm. R. S. Stokvis & Zonen, Paris and Rotterdam. Andrews & George Co., Tokyo.

TRADE NOTES

MORSE ENGINEERING CO., St. Louis, Mo., has been appointed exclusive territorial selling agent for the Ramsey Chain Co., Inc., Albany, N. Y.

S & S MACHINE WORKS, manufacturers of automatic machinery, have moved from 4522 Lexington St., Chicago, Ill., to their new building at 4539-41 W. Lake St.

WARD LEONARD ELECTRIC CO., Mt. Vernon, N. Y., has appointed Ralph Morley, 5 Great Jones St., New York City, distributor in the metropolitan district for its complete line of motor starters and resistor units.

FOX MACHINE CO., Jackson, Mich., reports that it has recently received an order from Japan for a Fox No. 22A multiple drilling machine equipped with eight spindles of 1¾ inches diameter, and weighing in the vicinity of 4500 pounds.

ECLIPSE INTERCHANGEABLE COUNTERBORE CO., Detroit, Mich., recently acquired the patent rights and entire stock of Robinson adjustable centers, and is now carrying a large and complete stock of all standard sizes of these centers.

OILGEAR CO., 398 Thirty-eighth St., Milwaukee, Wis., manufacturers of hydraulic presses, broaching machines, tunnel kiln pushers and variable delivery pumps, has moved into new and larger quarters at 655-667 Park St., Milwaukee, Wis.

GIBB INSTRUMENT CO., Bay City, Mich., manufacturer of electric welding equipment, announces the appointment of D. A. Clements as representative of the company in Missouri and southern Illinois, with headquarters at 4167 Washington Ave., St. Louis, Mo.

CLEVELAND DUPLEX MACHINERY CO., INC., Cleveland, Ohio, has been appointed exclusive representative of the J. F. Buhr Machine Tool Co. of Detroit, Mich., for the sale of Buhr multiple-spindle drill heads and drilling machines in the Cleveland territory.

ACME ELECTRIC WELDER CO., 5615 Pacific Blvd., Los Angeles, Cal., manufacturer of electric spot-welding machines, has appointed the T. L. Knudtson Engineering Co., 184 W. Washington St., Chicago, Ill., representative for Acme spot-welding machines in the central states.

BOSTON GEAR WORKS SALES CO., Norfolk Downs (Quincy), Mass., has been incorporated to handle the marketing of the products of the Boston Gear Works, Inc. The branches and distributors are now carrying a much larger stock in order to give the best possible service to the customers.

ROCKFORD TOOL CO., 2402 Eleventh St., Rockford, Ill., has appointed the E. L. Essley Machinery Co., of Chicago and Milwaukee, exclusive representative in that territory for Rockford millers and Sundstrand lathes. A complete line of these machines will be carried in the Chicago and Milwaukee stores.

WORTHINGTON PUMP & MACHINERY CORPORATION, 115 Broadway, New York City, has placed a contract with the Austin Co., engineers and builders of Cleveland, Ohio, for the construction of a new unit at its Buffalo branch plant. The contract calls for a pattern storage building 80 by 200 feet, two stories high.

NATIONAL TWIST DRILL & TOOL CO., Detroit, Mich., has recently moved its Chicago store from 565 W. Washington Blvd. to its new ground floor store at 26 S. Jefferson St. The amount of stock carried in Chicago has been approximately doubled, thus considerably increasing the facilities for handling orders in this territory.

HANNA ENGINEERING WORKS, 1763 Elston Ave., Chicago, Ill., manufacturer and distributor of Hanna riveting machines, air hoists, sand sifters, I-beam trolleys, and Mumford milling machines, is now represented in Maine, New Hampshire, Vermont, Massachusetts and Rhode Island by the Eggleston Supply Co., 259 Franklin St., Boston, Mass.

CYRIL J. BATH & CO., 1738 St. Clair Ave., N.E., Cleveland, Ohio, announces that the Midland Bank, as trustee for the bondholders of the Sharon Pressed Steel Co., has placed the sale of the equipment and real estate of this company into the hands of Cyril J. Bath & Co. The Sharon Pressed Steel Co. was engaged in the manufacture of heavy press work and frame rails for automobiles.

CONSOLIDATED MACHINE TOOL CORPORATION OF AMERICA, Wilmington, Del., announces the removal of the Colburn Machine Tool Works from Cleveland, Ohio, to the Betts Machine Works, Rochester, N. Y., the object being to increase the efficiency of operation through the combining of the engineering, sales and manufacturing organizations of both plants, as well as effecting large economies in production.

INDEPENDENT PNEUMATIC TOOL CO., Chicago, Ill., at a meeting of the board of directors held August 18, elected Gordon H. McCrea, manager of the company's London office, vice-president of the company. Mr. McCrea is visiting America at the present time making a study of the manufacture of the Thor pneumatic and electric tools, after which he will return to his headquarters at 40 Broadway, Westminster, London, England.

WARREN WEBSTER & CO., Camden, N. J., has opened two new branches at Butte, Mont., and Albany, N. Y. The Butte office is located at 223 N. Main St., and is in charge of T. L. Sullivan, formerly of the Anaconda Copper Mining Co. and more recently with the Montana State Engineering Department. Horace A. Bond for many years service engineer with the New York City branch, will be in charge of the Albany office at 28 S. Pearl St.

NORMA CO. OF AMERICA, Anable Ave., Long Island City, N. Y., manufacturer of ball and roller bearings, announces that it has changed its name to the NORMA-HOFFMAN BEARINGS CORPORATION. This change has been made in order that the company may realize the full value of its trademarks "Norma" and "Hoffmann" and also to better describe the nature of its business. The management, personnel, and policies will remain the same as heretofore.

PAWLING & HARNISCHFEGER CO., 3826 National Ave., Milwaukee, Wis., manufacturers of electric cranes and hoists, machine tools and excavating machinery, has engaged P. H. Sackett of 3445 Hennepin Ave., Minneapolis, Minn., to represent the company in Minnesota and North and South Dakota. The company also announces the addition to its plant of a large steel foundry formerly operated by the Hercules Steel Casting Co. for commercial production, but now entirely devoted to turning out the steel castings required for the production of P. & H. machines. When operating two shifts, this foundry will be able to turn out the 400 tons of carbon steel and alloy steel castings used each month in P. & H. production.

NORTON CO., Worcester, Mass., manufacturer of grinding wheels and grinding machines, announces that the Detroit Machine Tool Co., has been consolidated with the Norton Co. The Detroit Machine Tool Co. developed and has for several years built and marketed centerless grinding machines. No change will be made in the business policy of the Detroit Machine Tool Co. Harold W. Holmes will continue as president and general manager, and the plant at 6545 St. Antoine St., Detroit, will be maintained as before. The following officers and directors of the Norton Co. have been added to the board of directors of the Detroit Machine Tool Co.: Clifford S. Anderson, vice-president; Henry Duckworth, treasurer; William LaCoste Neilson; and Aldus C. Higgins.

LINK BELT CO., 910 S. Michigan Ave., Chicago, Ill., announces several changes in its organization: The chairman of the board of directors has been made chief executive of the company and an executive committee of four has been created to act in an advisory capacity to the officers. Charles Piez, formerly president of the company, has been elected chairman of the board of directors and chairman of the executive committee; Alfred Kauffman, second vice-president of the company, has been elected president, and will have the general direction and supervision of operations and sales. Operations and sales in the eastern district will be directed and supervised by Staunton B. Peck, senior vice-president. Mr. Piez, Mr. Kauffman and Mr. Peck, together with Thomas B. Marston, form the executive committee. Arthur C. Johnson has been elected second vice-president, and has charge of operations and sales in the western district. Humphrey J. Kiely, third vice-president, will continue in charge of exports and sales in the New York district.

AMERICAN ENGINEERING CO., Philadelphia, Pa., has appointed the following representatives for the sale of their Lo-Hed Monorail Electric Hoists: H. D. Betts, 405 S. Franklin St., Syracuse, N. Y.; C. F. Bulletti Machinery Co., 67-71 Main St., San Francisco; A. G. Cary, 410 Endicott Bldg., St. Paul; Chatard and Norris, 206 Water St., Baltimore; Colwell and McMullin, Park Square Bldg., Boston; Coon-DeVisser Co., 1772 W. Lafayette Blvd., Detroit; H. D. Conkey & Co., 605 Chamber of Commerce Bldg., Chicago; Dravo-Doyle Co., Dravo Bldg., Pittsburg; A. Q. Dufour, Merchants and Manufacturers Bank Bldg., Milwaukee; Florandin Equipment Co., 110 W. 40th St., New York; Fulton Engineering Co., 612 American Bank Bldg., San Francisco; S. A. Gilliard, 405 Liberty Bldg., Buffalo; E. C. Horne Machinery Co., 1751 Wazee St., Denver; J-B Engineering Sales Co., New Haven; Lyman Tube and Supply Co., Montreal; J. R. Purser, 406 Commercial Bank Bldg., Charlotte, N. C.; Seeger Machine Tool Co., 260 Luckie St., Atlanta; Solon Jacobs & Co., 420 S. 20th St., Birmingham, Ala.; P. E. Wright Engineering Co., 2012 L. C. Smith Bldg., Seattle.

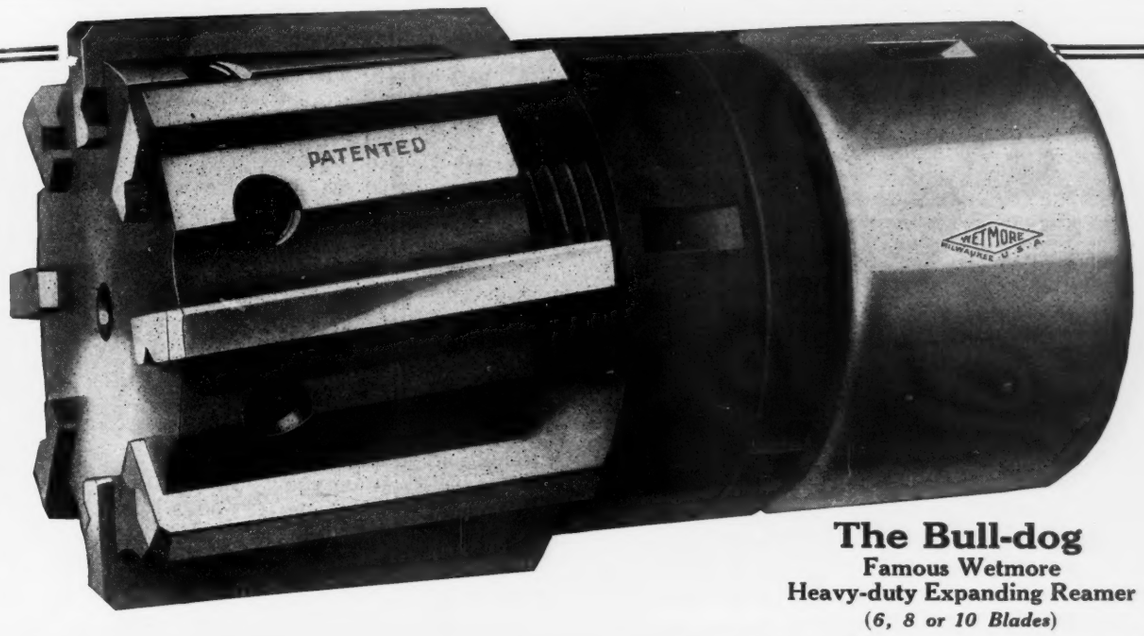

The Bull-dog
Famous Wetmore
Heavy-duty Expanding Reamer
(6, 8 or 10 Blades)

Another Wetmore Reamer that Cuts Production Costs

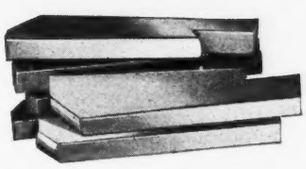

THE method of holding the blades in the Wetmore Heavy-duty Reamer eliminates unnecessary extra parts. This saves time and simplifies the replacement and adjustment of blades.

All Wetmore blades are scientifically ground for working various metals—steel, cast iron, bronze, etc. Best high-speed steel, ground to thickness, length and on seat. Tested for hardness and toughness. In ordering, give type and size of reamer and whether reamer is to be used on steel, cast iron or bronze.

THIS Wetmore "Bull-dog" Reamer combines all the advantages of both solid and adjustable reamers. Its new tongue drive relieves strain on the coupling nut. Assures perfect alignment between arbor and body. Large adjustment provides for wear and regrinding, so that this reamer with its original blades actually out'asts several solid, non-adjustable reamers. The 1/8" projection of the blades over the end of the reamer body allows the chips to fall off ahead of the reamer, and prevents chips from clogging up along cutting edge of blades.

Wetmore Expanding Reamers are being specified in many of the largest shops because they *cut production costs*, (1) by doing faster, more accurate work; (2) by their longer life. Here are a few Wetmore features that appeal to production men:

Adjustments to the thousandth of an inch can be made in less than a minute. In fact, the Wetmore is the quickest and easiest adjusting reamer made.

Cone expansion nut keeps blades always parallel with axis.

Solid, heat-treated alloy steel body guaranteed against breakage. Left Hand Angle Cutting Blades that prevent digging in, chattering and scoring of the reamer while backing out. Shearing effect of blades increases life of cutting edge.

No grinding arbor required for regrinding. Wetmore Reamers can be reground on their original centers.

Free Catalog

Write today for Wetmore catalog, showing complete line of standard, heavy-duty, shell, small machine and cylinder reamers. Also arbors and replacement blades. Sent ***free—postpaid.***

WETMORE REAMER COMPANY
MILWAUKEE WISCONSIN

WETMORE EXPANDING REAMERS
"THE BETTER REAMER"

COMING EVENTS

SEPTEMBER 15-18—Machine tool exhibit at the Mason Laboratory, Sheffield Scientific School, Yale University, New Haven, Conn., under the auspices of the American Society of Mechanical Engineers, Yale University, and the New Haven Chamber of Commerce. Professor S. W. Dudley is in charge of the exhibit.

SEPTEMBER 16-19—Thirty-second annual convention of the Traveling Engineers' Association at the Hotel Sherman, Chicago, Ill. Secretary, W. O. Thompson, 1177 E. 98th St., Cleveland, Ohio.

SEPTEMBER 18-19—Automotive transportation meeting at the Society of Automotive Engineers' headquarters, Engineering Societies' Bldg., 29 W. 39th St., New York City. Coker F. Clarkson, secretary.

SEPTEMBER 19-20—Meeting of the American Management Association at Swampscott, Mass. Headquarters of the association, 20 Vesey St., New York City.

SEPTEMBER 22-26—Sixth convention and international steel exposition of the American Society for Steel Treating, in Boston. Secretary, W. H. Eisenman, 4600 Prospect Ave., Cleveland, Ohio.

OCTOBER 13-18—Twenty-eighth annual convention and exhibit of the American Foundrymen's Association in Milwaukee, Wis. Secretary, C. E. Hoyt, 140 S. Dearborn St., Chicago, Ill.

OCTOBER 16-18—American Gear Manufacturers' Association's semi-annual meeting at Briarcliff Lodge, Briarcliff Manor, N. Y. T. W. Owen, secretary, 2443 Prospect Ave., Cleveland, Ohio.

OCTOBER 20-23—Fall meeting of the Electric Power Club at Greenbriar Hotel, White Sulphur Springs, W. Va. Address of the secretary, B. F. Keith Building, Cleveland, Ohio.

OCTOBER 22-24—Production meeting of the Society of Automotive Engineers at Detroit, Mich. Secretary, Coker F. Clarkson, 29 W. 39th St., New York City.

NOVEMBER 18-19—Service engineering meeting of the Society of Automotive Engineers at Cleveland, Ohio. Secretary, Coker F. Clarkson, 29 W. 39th St., New York City.

DECEMBER 1-4—Forty-fifth annual meeting of the American Society of Mechanical Engineers in the Engineering Societies' Building, 29 W. 39th St., New York City.

DECEMBER 1-6—Third National Exposition of Power and Mechanical Engineering in the Grand Central Palace, New York City.

DECEMBER 8-13—Exposition of invention at the Engineering Societies' Building, 29 W. 39th St., New York City. General offices, 47 W. 34th St., New York.

NEW BOOKS AND PAMPHLETS

PHYSICAL PROPERTIES OF MATERIALS. 204 pages, 7 by 10 inches. Published by the Department of Commerce, Washington, D. C., as Circular No. 101 of the Bureau of Standards. Price, 40 cents.

THERMAL EXPANSION OF MOLYBDENUM. By Peter Hidnert and W. B. Gero. 16 pages, 7 by 10 inches. Published by the Department of Commerce, Washington, D. C., as Scientific Paper No. 488 of the Bureau of Standards. Price, 10 cents.

PRIMARY RADIO-FREQUENCY STANDARDIZATION BY USE OF THE CATHODE-RAY OSCILLOGRAPH. By Grace Hazen and Frieda Kenyon. 17 pages, 7 by 10 inches. Published by the Department of Commerce, Washington, D. C., as Scientific Paper No. 489 of the Bureau of Standards. Price, 10 cents.

DEVELOPMENT OF A METHOD FOR MEASUREMENT OF INTERNAL STRESS IN BRASS TUBING. By Robert J. Anderson and Everett G. Fahlman. 13 pages, 7 by 10 inches. Published by the Department of Commerce, Washington, D. C., as Technologic Paper No. 257 of the Bureau of Standards. Price, 5 cents.

STRENGTH OF STEEL TUBING UNDER COMBINED COLUMN AND TRANSVERSE LOADING, INCLUDING TESTS OF COLUMNS AND BEAMS. By Tom W. Greene. 34 pages, 7 by 10 inches. Published by the Department of Commerce, Washington, D. C., as Technologic Paper No. 258 of the Bureau of Standards. Price, 15 cents.

THE CALCULUS FOR ENGINEERS. By Ewart S. Andrews and H. Bryon Heywood. 269 pages, 4½ by 7½ inches. Published by Scott, Greenwood & Son, 8 Broadway, Ludgate Hill, E. C. 4, London, England. American distributors, D. Van Nostrand Co., 8 Warren St., New York City. Price, $3 postpaid.

This is the second edition of a work on the calculus that has been prepared with the aim of treating the calculus as an engineering subject. The book is the outcome of the combined efforts of an engineer and a mathematician. Each new development of the subject is approached through an engineering problem so that the need of a proposition will be first felt and then the proposition provided. Considerable attention is given to typical engineering applications. A number of exercises have been included throughout the book by means of which the student may test his knowledge of the subject.

NEW CATALOGUES AND CIRCULARS

TOOL-HOLDERS. Willard Tool Co., Inc., Stratford, Conn. Catalogue and price list of Willard spring tool-holders for threading, forming, and cutting-off tools.

LIFT TRUCKS. Sturdi-Truck Mfg. Co., Inc., Wilmington, Del. Circular illustrating the "Sturdi-Truck" and its application for moving different classes of materials.

REAMERS. Conradson Tool Corp., 2539 Woodward Ave., Detroit, Mich. Folder illustrating and calling attention to the features of the reamers made by the company.

ELECTRIC DRILLS. Chicago Pneumatic Tool Co., 6 E. 44th St., New York City. Bulletin 896, descriptive of a new "Little Giant" electric hammer drill, equipped with a universal motor.

CONTROLLERS FOR ELECTRIC MOTORS. Monitor Controller Co., Baltimore, Md. Circular containing a historic outline of the development of the Monitor system of control for electric motors, from 1888 to 1919.

SILENT CHAIN. Ramsey Chain Co., Inc., 1039 Broadway, Albany, N. Y., has published a treatise entitled "Power Transmission with Ramsey Silent Chain." Copies will be sent upon request to those interested in this subject.

INDICATING AND RECORDING INSTRUMENTS. Foxboro Co., Inc., Neponset Ave., Foxboro, Mass. Circular announcing the improved helical tube movement incorporated in Foxboro recording thermometers and gages.

SECOND-HAND MACHINES. Walter A. Zelnicker Supply Co., 511 Locust St., St. Louis, Mo. Bulletin 326, containing a list of second-hand machine tools, rails, cars, locomotives, pipe and tanks, etc., which this company has in stock.

WRENCHES. Husky Wrench Co., 928 Sixteenth Ave., Milwaukee, Wis. Circular illustrating and describing the different styles of interchangeable socket wrenches made by this concern for automotive and industrial repair work.

ELECTRICAL APPARATUS AND SUPPLIES. General Electric Co., Schenectady, N. Y. Booklet containing views in the various works of the company, illustrating the methods of designing, manufacturing, and testing electrical products.

FRICTION CLUTCHES. Williams Foundry & Machine Co., Akron, Ohio. Catalogue 10, of Akron friction clutches, illustrating and describing the construction, and giving tables of specifications for the various sizes, including power, dimensions, etc.

BABBITT METAL. United American Metals Corporation, Diamond St. and Meserole Ave., Brooklyn, N. Y., has issued the first two of a series of booklets on buying babbit metals. Those interested in this subject may obtain copies upon request.

CENTERS. Eclipse Interchangeable Counterbore Co., Detroit, Mich. Circular descriptive of the Eclipse interchangeable and adjustable center with high-speed steel insert, formerly known as the Robinson adjustable center. List prices are given for the different sizes.

CUTTING TOOLS. Ritz Tool Mfg. Co., 189 Ridge St., Newark, N. J. Catalogue describing "Ritz-Tip" cutting tools, which are made with a carbon-steel shank and a tip of special hard metal known as "Ritz metal." Price lists of the different sizes are included.

HIGH-SPEED DRILLS. Cleveland Twist Drill Co., Cleveland, Ohio. Booklet recording tests conducted at a recent convention of the American Railway Association in Atlantic City, on "Cle-forge" high speed drills, which established a new world's drilling record for cast iron and machine steel.

TOOL STEEL. Columbia Tool Steel Co., Chicago Heights, Ill. New handbook on Columbia tool steel, comprising a complete treatise on the use and handling of this steel. The book also gives information under the heading "Tool Steel Hints," on making the tool; heat-treating; heat-treating equipment; and testing instruments.

MILLING CUTTERS. Ingersoll Milling Machine Co., Rockford, Ill. Bulletin 44, illustrating and describing Ingersoll standard and special inserted-tooth milling cutters, including face mills, slabbing cutters, channeling cutters, side mills, interlocking cutters and profile milling cutters. Specifications are given for the different types.

SHAPERS. Columbia Machine Tool Co., Hamilton, Ohio. Bulletin 11, illustrating and describing the Columbia 36-inch "Superior" heavy-duty back-geared shaper, especially designed for use in railroad work. The locomotive shoe and wedge chuck and the driving-rod brass attachment with which this machine is equipped are also illustrated.

VERTICAL TURRET LATHES. Bullard Machine Tool Co., Bridgeport, Conn. Reference book of vertical turret lathe practice in railroad shops, containing a large number of specific examples of the production of locomotive parts on the vertical turret lathe. The tool equipment and operation lay-out are illustrated and definite production figures are given.

GEARS. W. A. Jones Foundry & Machine Co., 4409 W. Roosevelt Road, Chicago, Ill. Catalogue 29, entitled "Jones Gears," covering the complete line of gears made by this concern, which ranges from those of very large size to small pinions, including spur gear speed reducers; enclosed worm-gear drives; and cast-iron, cast-steel, rawhide, and bakelite gears, with teeth cut or molded, of the spur, bevel or worm type. The various gears are illustrated and described and complete dimensions are given.

SILENT CHAIN DRIVES. Morse Chain Co., Ithaca, N. Y. Publication No. 24 entitled "A Chain of Evidence," relating to large power drives; a similar publication No. 26A relating to small power drives; booklet entitled "Power, Its Application from the Seventeenth Dynasty in Egypt to the Twentieth Century," being an address by F. L. Morse before the Twenty-sixth Annual Convention of the American Mining Congress; and booklet entitled "A Chain of Testimonials," containing illustrations of chain drives, together with specific data pertaining to the results obtained.